HURAIAN PINDAAN DOKUMEN ISO UPM

BAHAGIAN A: Huraian Pindaan Dokumen ISO

(Diisi oleh Pemohon/Pemilik Proses dan sila abaikan ruangan No. CPD kerana akan dilengkapkan oleh TPKD PP)

No. CPD	Pemilik Proses	Pernyataan Pindaan/Baharu		Tambahan (T)/ ~~Pemotongan~~ (P)
		Asal	Baharu	
EMS PPUU	1/2018	~~**ENVIRONMENTAL QUALITY (LICENSING) REGULATIONS 1977**~~ ~~**[P.U.(A) 198/77]**~~ ~~**Form of application for licence**~~ ~~**Regulation (2)**~~ ~~Application for licence must be made in accordance with prescribed form signed by a person duly authorized in that behalf by the University.~~ ~~**Revocation and suspension of licence**~~ ~~**Regulation (1)**~~ ~~If the University fails to comply with any term or condition of the licence. The DG may revoke the licence or suspend it for such period as he thinks fit.~~ ~~**Regulation (2)**~~ ~~Period of suspension of a licence equals to revocation of a licence.~~ ~~**Regulation (3)**~~ ~~The revocation or suspension of a licence take effect after the University receives written notice.~~		P

No. CPD	Pemilik Proses	Pernyataan Pindaan/Baharu		Tambahan (T)/ ~~Pemotongan~~ (P)
		Asal	Baharu	
		~~**SCHEDULE**~~ ~~The form of application and the licence are specified in Form 1 and Form 2 of the Schedule.~~		
		~~**ENVIRONMENTAL QUALITY (MOTOR VEHICLE NOISE) REGULATIONS 1987**~~ ~~**[P.U.(A). 244/87]**~~ ~~**Maximum sound level permitted for motor vehicles having two wheels or three wheel**~~ ~~**Regulation 4(1) & (2)**~~ ~~Maximum level of sound emitted by motor vehicle having two wheels or three wheels shall be the sound level of Standard B as prescribed in the First Schedule.~~ ~~**Maximum sound level permitted for motor vehicles having more than three wheels**~~ ~~**Regulation 5**~~ ~~Maximum level of sound emitted by motor vehicle more than three wheels shall be the sound level of Standard C as prescribed in the Second Schedule.~~ ~~**Sound level tests.**~~ ~~**Regulation 7(1)**~~ ~~Sound level tests for motor vehicles having two wheels or three wheels shall be conducted in accordance with the Third Schedule.~~		**P**

No. CPD	Pemilik Proses	Pernyataan Pindaan/Baharu		Tambahan (T)/ ~~Pemotongan~~ (P)
		Asal	Baharu	
		~~**Regulation 7(2)**~~ ~~Sound level tests for motor vehicles having more than three wheels shall be conducted in accordance with the Fourth Schedule.~~ ~~**Recording of tests**~~ ~~**Regulation 8**~~ ~~Any test conducted to determine sound level for the purposes of these regulations shall be recorded in the form prescribed in the Fifth Schedule.~~ ~~**FIRST SCHEDULE**~~ ~~Maximum sound level permitted for motor vehicles having two wheels or three wheels (Regulation 4)~~ ~~**STANDARD A**~~ ~~*Category of Vehicle*~~ ~~*Maximum Sound Level Permitted (dB (A))*~~ 1. ~~125 cc. and below~~ ~~95~~ 2. ~~Above 125 c.c.~~ ~~99~~ ~~**STANDARD B**~~ ~~*Category of Vehicle Maximum Sound Level Permitted (dB (A))*~~ ~~1. Below 90 cc.~~ ~~92~~ ~~2. 90 c.c. and above~~ ~~95~~		

No. CPD	Pemilik Proses	Pernyataan Pindaan/Baharu		Tambahan (T)/ ~~Pemotongan~~ (P)
		Asal	Baharu	
		~~**SECOND SCHEDULE**~~ ~~Maximum sound level permitted for motor vehicles having more than three wheels are as follows:-~~ ~~1. Used for the carriage of passengers and comprising not more than 9 seats (including the driver's seat) [80 dB (A)];~~ ~~2. Used for the carriage of passengers and comprising more than 9 seats. Permitted maximum weight does not exceed 3.5 tonnes [81 dB (A)]~~ ~~3. Used for the carriage of goods. Permitted maximum weight does not exceed 3.5 tonnes. Engine is less than 200 h.p. DIN [81 dB (A)];~~ ~~4. Used for the carriage of passengers and comprising more than 9 seats. Permitted maximum weight exceeds 3.5 tonnes. Engine is less than 200 h.p. DIN [82 dB (A)];~~ ~~5. Used for the carriage of passengers and comprising more than 9 seats. Permitted maximum weight exceeds 3.5 tonnes. Engine is 200 h .p. DIN or more [85 dB (A)];~~ ~~6. Used for the carriage of goods. Permitted maximum weight exceeds 3.5 tonnes. Engine is less than 200 h.p. DIN [86 dB (A)]; and~~ ~~7. Used for the carriage of goods. Permitted maximum weight exceeds 3.5 tonnes. Engine is 200 h.p. DIN or more [88 dB (A)].~~		

No. CPD	Pemilik Proses	Pernyataan Pindaan/Baharu		Tambahan (T)/ ~~Pemotongan~~ (P)
		Asal	Baharu	
		~~**THIRD SCHEDULE**~~ ~~Sound level test for motor vehicles having two wheels or three wheels (Regulation 7) are as follows:~~ ~~I. INSTRUMENTATION.~~ ~~1. The sound level meter (or an equivalent measuring system) shall meet a type 1 or 0 instrument according to IEC Publication 651.~~ ~~2. The measurements shall be made using the frequency weighting "A", and the time weighting characteristic "F".~~ ~~3. The calibration of the sound level meter shall be checked and adjusted according to the manufacturer's instructions or with a standard sound source (for example a pistonphone) at the beginning and at the end of each series of measurements. If the errors of the sound level meter obtained from these calibrations change by more than 1 dB during a series of measurements, the test shall be considered invalid.~~ ~~II. TEST SITE.~~ ~~1. Any open space may be considered as a suitable test site if it consists of a flat area made of concrete, asphalt or hard material having a high acoustical reflectivity, excluding compressed or other earth surfaces.~~ ~~2. The edges of the test site shall be at least 3 metres from the extremities of the vehicle and there shall be no feature or object present on the test site which is likely to affect the reading of the sound level meter; in particular, the vehicle shall be at a distance of~~		

No. CPD	Pemilik Proses	Pernyataan Pindaan/Baharu		Tambahan (T)/ ~~Pemotongan~~ (P)
		Asal	**Baharu**	
		~~not less than one metre from a pavement edge when the exhaust noise is measured.~~ ~~3. Any significant obstacles outside the test site shall, in addition, not be closer than 3 metres to the microphone during the test.~~ ~~4. With the exception of the observer and driver, no person shall remain in the test site during the test.~~ ~~III. BACKGROUND NOISE AND WIND INTERFERENCE.~~ ~~1. The level of background noise (including any wind noise) at each measurement position shall be at least 10 dB less than the levels measured during the test.~~ ~~2. Measurements shall not be made in adverse weather conditions. Tests shall not be made if the wind speed at microphone height exceeds 5 m/s.~~ ~~IV. TEST PROCEDURE.~~ ~~A - *Number of Measurements.*~~ ~~1. At least three measurements shall be carried out at each measuring position.~~ ~~2. The measurements shall be considered valid if the range of three measurements made immediately one after the other is not greater than 2 dB.~~ ~~3. The arithmetic mean value given by these measurements shall constitute the result.~~		

No. CPD	Pemilik Proses	Pernyataan Pindaan/Baharu		Tambahan (T)/ ~~Pemotongan~~ (P)
		Asal	Baharu	
		~~B - *Position and Preparation of the Vehicle.*~~ ~~1. The vehicle shall be located in the centre of the test area, with the gear in neutral and with the clutch engaged.~~ ~~2. Before each series of measurements the engine shall be brought to its normal operating temperature.~~ ~~3. In the case of a vehicle with no neutral gear position, measurements shall be carried out with the rear wheel raised off the ground.~~ ~~C - *Microphone Positions.*~~ ~~1. The height of the microphone above the ground shall be equal to that of the outlet orifice of the exhaust gases, but in any case shall not be less than 0.2 metre.~~ ~~2. The microphone shall be pointed towards the outlet orifice and located at a distance of 0.5 metre from the orifice.~~ ~~3. Unless otherwise indicated by the manufacturer of the sound level meter, its reference axis for free field conditions shall be parallel to the ground and shall make an angle of 450 ± 100 with the vertical plane containing the direction of the gas flow. In relation to this plane, the microphone shall be placed towards the external side of the vehicle as shown in Figure 1.~~ ~~4. In the case of a vehicle provided with two or more exhaust outlets spaced not more than 0.3 metre apart and connected to a single silencer, only one measurement position shall be used; the microphone position shall be related to the outlet orifice nearest to the external side of the vehicle or, when such an outlet orifice cannot be determined, to the outlet which is the highest above the ground.~~ ~~5. For vehicles provided with exhaust outlet orifices spaced more~~		

No. CPD	Pemilik Proses	Pernyataan Pindaan/Baharu		Tambahan (T)/ ~~Pemotongan~~ (P)
		Asal	**Baharu**	
		~~than 0.3 metre apart, one measurement shall be made for each outlet as if it were the only one, and the highest level noted.~~ ~~6. Where the vehicle design is such that the microphone cannot be placed according to Figure 1 because of the presence of obstacles being part of the vehicle, a figure clearly showing the place chosen for the microphone shall be drawn when the measurement is carried out. As far as possible, the microphone shall be placed at a distance greater than 0.5 metre from the nearest obstacle and its reference axis for free field conditions shall be orientated towards the exhaust gas orifice at a place which is the least masked by the obstacles.~~ ~~D - *Engine Operating Conditions*~~ ~~1. The engine speed shall be stabilized at n/2 if n is greater than 5000 rev/mm. or 3n/4 if n is less than 5000 rev/min., where n is the engine speed at which the engine produces its maximum power as indicated by the manufacturer.~~ ~~2. The throttle shall then be suddenly closed, and the noise measured during a period of operation consisting of a brief maintenance of the above constant engine speed and throughout the deceleration. The highest level only shall be recorded.~~		

No. CPD	Pemilik Proses	Pernyataan Pindaan/Baharu		Tambahan (T)/ ~~Pemotongan~~ (P)
		Asal	Baharu	
		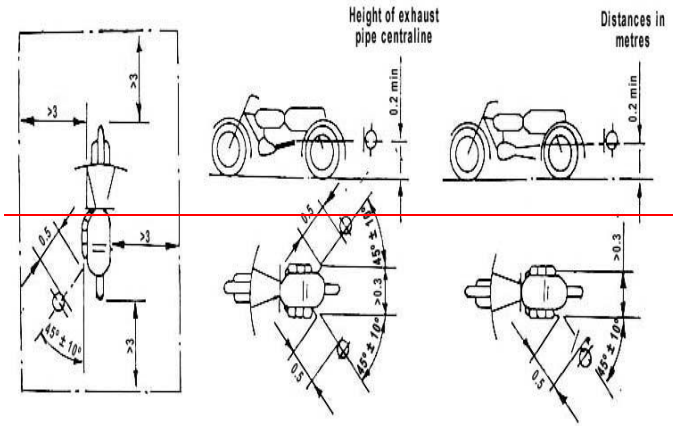 ~~Figure 1: Test Site And Microphone Position For Measuring Exhaust Noise.~~ ~~**FOURTH SCHEDULE**~~ ~~Sound level test for motor vehicles having more than three wheels (regulation 7) are as follows:-~~ ~~I. INSTRUMENTATION.~~ ~~A - *Instrument for Acoustical Measurements.*~~ ~~1. The sound level meter (or an equivalent measuring system) shall at least meet the requirements of a type 1 instrument according to IEC Publication 651.~~ ~~2. The measurements shall be made using the frequency weighting "A", and the time weighting "F".~~ ~~3. The calibration of the sound level meter shall be checked and adjusted according to the manufacturer's instructions or with a standard sound source (for example a pistonphone) at the~~		

No. CPD	Pemilik Proses	Pernyataan Pindaan/Baharu		Tambahan (T)/ ~~Pemotongan~~ (P)
		Asal	Baharu	
		~~beginning and at the end of each series of measurements. If the errors of the sound level meter obtained from these calibrations change by more than 1 dB during a series of measurements, the test shall be considered invalid.~~ ~~B - *Instrument for Speed Measurement.*~~ ~~The rotational speed of the engine and the road speed of the vehicle. during the approach shall be measured with instruments with an accuracy of 3% or better.~~ ~~II. TEST SITE.~~ ~~1. The test site shall be substantially level, the surface dry and its texture such that it does not cause excessive tyre noise.~~ ~~2. The test site shall be such that hemispherical divergence exists between the noise source and the microphone to within ± I dB. This condition is deemed to be satisfied if the following requirements are met:~~ ~~(a) within a radius of 50 m around the centre of the track the space shall be free of large reflecting objects such as fences, rocks, bridges or buildings;~~ ~~(b) the test track and the surface of the site up to 10 m from the centre 0 of the track shall consist of concrete, asphalt or similar hard material and be free from absorbing materials such as long grass or ashes;~~ ~~(c) in the vicinity of the microphone there shall be no obstacle that could influence the acoustical field and no person shall remain between the microphone and the noise source~~		

No. CPD	Pemilik Proses	Pernyataan Pindaan/Baharu		Tambahan (T)/ ~~Pemotongan~~ (P)
		Asal	Baharu	
		~~III. BACKGROUND NOISE AND WIND INTERFERENCE.~~ ~~1. The level of background noise (including any wind noise) shall be at least 10 dB below that produced by the vehicle under test.~~ ~~2. Measurements shall not be made in adverse weather conditions. Tests shall not be carried out if the wind speed at microphone height exceeds 5 m/s.~~ ~~IV. TEST PROCEDURE.~~ ~~A - *Microphone Positions.*~~ ~~1. The distance from the microphone positions to the reference line CC (see Figure 2) on the test track shall be 7.5 m.~~ ~~2. The microphone shall be located 1.2 m above ground level. Unless otherwise indicated by the manufacturer of the sound level meter, its reference axis for free field conditions shall be horizontal and directed perpendicularly towards the path of the vehicle (line CC).~~ 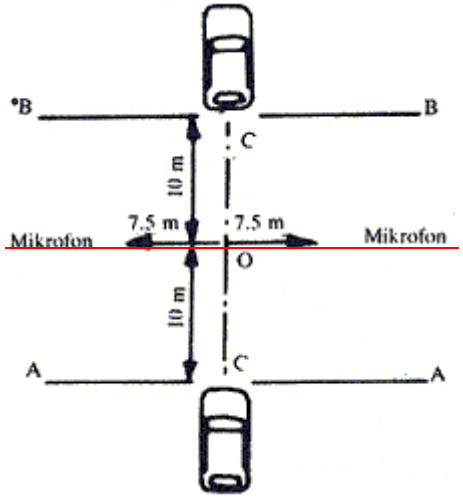 		

No. CPD	Pemilik Proses	Pernyataan Pindaan/Baharu		Tambahan (T)/ ~~Pemotongan~~ (P)
		Asal	Baharu	
		~~Figure 2: Microphone positions for measurements.~~ ~~B - *Number of Measurements.*~~ ~~1. At least two measurements shall be made on each side of the vehicle.~~ ~~2. The results shall be considered valid if the differences between two consecutive measurements made on the side of the vehicle which gives the higher sound pressure level do not exceed 2 dB.~~ ~~3. The highest value given by these measurements shall constitute the result.~~ ~~C - *Conditions of the Vehicle.*~~ ~~Measurements shall be made on vehicles unladen except for the driver and, except in the case of non-separable vehicles, without trailer or semi-trailer.~~ ~~D - *Operating Conditions.*~~ ~~1. *General conditions:*~~ ~~1. The vehicle shall approach the line AA with the path of its centre line following as closely as possible the line CC as specified in paragraphs 2 (1) to 2 (3) as appropriate.~~ ~~2. When the front of the vehicles reaches the line AA, the throttle shall be fully opened as rapidly as practicable (without operating the kick-down, if any) and held fully open until the rear of the vehicle reaches line BB; the throttle shall then be closed as rapidly as possible.~~ ~~3. Any trailer which is not readily separable from the towing vehicle shall be ignored when considering the crossing of the line BB.~~		

No. CPD	Pemilik Proses	Pernyataan Pindaan/Baharu		Tambahan (T)/ ~~Pemotongan~~ (P)
		Asal	Baharu	
		~~4. If the vehicle is fitted with more than two-wheel drive, it shall be tested in the drive which is intended for normal road use.~~ ~~5. If the vehicle incorporated equipment such as a concrete mixer, a compressor, etc., the equipment shall not be in operation during the test.~~ ~~2. *Special conditions.*~~ ~~1. *Vehicles without gear-box.*~~ ~~The vehicle shall approach the line AA at a uniform vehicle speed corresponding to one of the following:~~ ~~i. an engine rotational speed equal to 3/4 of the speed, n, at which the engine produces its net maximum power; or~~ ~~ii. 3/4 of the engine maximum rotational speed allowed by the governor, at full load conditions of the engine; or~~ ~~iii. 50 km/h, whichever is the lowest.~~ ~~2. *Manual transmission vehicle.*~~ ~~(a) *Approach speed.*~~ ~~The vehicle shall approach the line AA at a uniform vehicle speed corresponding to one of the following:~~ ~~i. an engine rotational speed equal to 3/4 of the speed, n, at which the engine produces its net maximum power; or~~ ~~ii. 3/4 of the engine maximum rotational speed allowed by the governor, at full load conditions of the engine; or~~ ~~iii. 50 km/h, whichever is the lowest.~~ ~~(b) *Choice of the gear ratio.*~~ ~~Commercial vehicles having a maximum authorized total weight of not more than 3.5 tonnes and passenger cars fitted~~		

No. CPD	Pemilik Proses	Pernyataan Pindaan/Baharu		Tambahan (T)/ ~~Pemotongan~~ (P)
		Asal	Baharu	
		~~with a gear-box having four or fewer forward gears shall be tested in second gear. When fitted with a gear-box having more than four forward gears, they shall be tested in both second and third gears. The average value of the sound levels recorded for these two conditions shall be calculated. Commercial vehicles having a maximum authorized total weight of more than 3.5 tonnes and buses whose whole number of forward gears is N (including those obtained by means of an auxiliary transmission or multi-gear axle) shall be tested successively with the gear selection equal to or higher than N/2. Only the condition giving the highest sound pressure level shall be reported.~~ ~~*3. Automatic transmission vehicle.*~~ ~~*(a)* Vehicles without a manual selector shall be tested at various uniform approach-speeds of 30, 40 and 50 km/h or at 3/4 of the on-road maximum speed if this value is lower. The condition with the highest sound pressure level shall be reported.~~ ~~*(b)* If a manual selector with N forward positions fitted to the vehicle, the test shall be performed with the selector in the position N; external downshifts (for example by kick-down) shall be excluded. The approach speed shall be that specified in paragraph 2 (2). If an automatic downshift occurs after the line AA, the test shall be rejected and repeated using the position N-1, N-2, etc., as necessary, until the selector is placed in the highest position that allows the test to be performed without automatic downshift, external downshifts (kickdown) being always excluded.~~		

No. CPD	Pemilik Proses	Pernyataan Pindaan/Baharu		Tambahan (T)/ ~~Pemotongan~~ (P)
		Asal	Baharu	
		~~*(c)* If the vehicle is fitted with an auxiliary manual transmission or a multi-gear axle, the position used for normal urban driving shall be used. In all cases, the special selector's positions for slow movements, parking, or braking shall be excluded.~~ ~~V. DEFINITION.~~ ~~In this Schedule –~~ ~~*(a)* "automatic downshift" means a gear change to a lower gear (higher numerical ratio) which occurs outside the control of the driver;~~ ~~"external downshift" means a gear change to a lower gear (higher numerical ratio) which can be initiated at the will of the driver.~~ ~~**FIFTH SCHEDULE**~~ ~~Record of the tests in accordance with the prescribed form.~~		
		~~**ENVIRONMENTAL QUALITY (COMPOUNDING OF OFFENCES) RULES 1978**~~ ~~**[P.U.(A) 281/78]**~~ ~~**Rule 2 (1)**~~ ~~Compounding an offence shall not exceed two thousand ringgit~~ ~~**Rule 2 (2)**~~ ~~Payment of the sum shall be made in cash, or by money order, postal order, cashier's order, banker's order, or banker's draft made payable to the Director General of Environment and crosses "Account Payee Only".~~		**P**

No. CPD	Pemilik Proses	Pernyataan Pindaan/Baharu		Tambahan (T)/ ~~Pemotongan~~ (P)
		Asal	Baharu	
		~~**ENVIRONMENTAL QUALITY (PROHIBITION OF THE USE OF CHLOROFLUOROCARBONS AND OTHER GASES AS PROPELLANTS AND BLOWING AGENTS) ORDER 1993 [P.U.(A) 434/93]**~~ ~~**Prohibition on the use of controlled substance as propellant**~~ ~~**Order 3.**~~ ~~The University is prohibited from manufacturing any controlled substance as propellant.~~ ~~**Prohibition on the use of combustible gas as propellant**~~ ~~**Order 4.**~~ ~~The use of combustible petroleum gas or other combustible gas as propellant in any manufacturing~~ ~~process, trade or industry of aerosol is prohibited with effect from the 1st January 1999.~~ ~~**Prohibition on the use of controlled substance as blowing agent**~~ ~~**Order 5.**~~ ~~The University is prohibited to use any controlled substance to produce:~~ ~~i. extruded polystyrene foam;~~ ~~ii. thermoformed plastic packaging;~~ ~~iii. moulded flexible polyurethane foam; and~~ ~~rigid polyurethane foam.~~ ~~**SCHEDULE**~~ ~~Controlled substance as follows:~~		**P**

No. CPD	Pemilik Proses	Pernyataan Pindaan/Baharu		Tambahan (T)/ ~~Pemotongan~~ (P)
		Asal	Baharu	
		~~**Part I**~~ ~~*Group Chemical formula Substance*~~ ~~I~~ ~~CFC13 Trichlorofluoromethane (CFC-11)~~ ~~CF2C12 Dichlorodifluoromethane (CFC-12)~~ ~~C2F3C13 Trichlorotrifluoroethane (CFC-113)~~ ~~C2F4C12 Dichlorotetrafluoroethane (CFC-114)~~ ~~C2F5C1 Chloropentafluoroethane (CFC-115)~~ ~~II~~ ~~CF2BrC1 Bromochlorodifluoromethane (halon-1211)~~ ~~CF3Br Bromotrifluoromethane (halon-1301)~~ ~~C2F4Br2 Dibromotetrafluoroethane (halon-2402)~~ ~~**Part II**~~ ~~I~~ ~~CF3C1 Chlorotrifluoromethane (CFC-13)~~ ~~C2FCI5 Pentachlorofluoroethane (CFC-111)~~ ~~C2F2C14 Tetrachlorodifluoroethane (CFC-112)~~ ~~C3FC17 Heptachlorofluoropropane (CFC-211)~~ ~~C3F2C16 Hexachlorodifluoropropane (CFC-212)~~ ~~C3F3C15 Pentachlorotrifluoropropane (CFC-213)~~ ~~C3F4C14 Tetrachlorotetrafluoropropane (CFC-214)~~ ~~C3F5C13 Trichloropentafluoropropane (CFC-215)~~ ~~C3F6C12 Dichlorohexafluoropropane (CFC-216)~~ ~~C3F7C1 Chloroheptafluoropropane (CFC-217)~~ ~~II~~ ~~CC14 Carbon tetrachloride~~		

No. CPD	Pemilik Proses	Pernyataan Pindaan/Baharu		Tambahan (T)/ ~~Pemotongan~~ (P)
		Asal	Baharu	
		~~III~~ ~~C2H3C13* 1, 1, 1-trichloroethane~~ ~~(methyl chloroform)~~ ~~* This formula does not refer to 1, 1, 2-trichloroethane.~~		
		~~**ENVIRONMENTAL QUALITY (PROHIBITION OF THE USE OF CONTROLLED SUBSTANCES IN SOAP, SYNTHETIC DETERGENT AND OTHER CLEANING AGENTS) ORDER 1995 [P.U.(A) 115/95]**~~ ~~**Prohibition on the use of controlled substance**~~ ~~**Order 3**~~ ~~The University is prohibited from using of any controlled substance to manufacture soap, synthetic detergent and other cleaning agents.~~ ~~**Schedule**~~ ~~CONTROLLED SUBSTANCE is Branched Alkylbenzene Sulphonates (BAS)~~ ~~**ENVIRONMENTAL QUALITY (CONTROL OF EMISSION FROM PETROL ENGINES) REGULATIONS 1996 [P.U.(A) 543/96]**~~ ~~**Restriction on installation or replacing of engine system.**~~ ~~**Regulation 4(1)**~~ ~~The University's employee shall not install, or replace the engine system of any University's vehicles with, a petrol engine which emits pollutants~~		**P**

No. CPD	Pemilik Proses	Pernyataan Pindaan/Baharu		Tambahan (T)/ ~~Pemotongan~~ (P)
		Asal	Baharu	
		~~in excess of the standard prescribed in the First Schedule~~ ~~**Application of regulation 4**~~ ~~**Regulation 5**~~ ~~Regulation 4 shall only apply to a motor vehicle intended to be used on the road, with or without bodywork, having at least four wheels but shall not apply to a motor vehicle used for racing purposes in designated racing circuits or in approved racing events.~~ ~~**Level of gaseous emission from petrol engine in use**~~ ~~**Regulation 10**~~ ~~Every petrol engine which is in use, in operation or is capable of being operated shall not emit gaseous pollutant exceeding the emission standard as prescribed in the Fourth Schedule.~~ ~~**Exhaust pipe to be straight**~~ ~~**Regulation 15**~~ ~~Exhaust pipe to be straight and free from any attachment~~ ~~**Engine to be put off in enclosed area**~~ ~~**Regulation 16**~~ ~~The University's employees shall not allow the engine of any motor vehicle to run while the motor vehicle is stationary for more than three minutes in an enclosed or a partially enclosed parking area or any terminus.~~ ~~**First Schedule**~~ ~~**Emission Standard Of Pollutants**~~ ~~The emission of the gaseous pollutant of Carbon Monoxide and the~~		

No. CPD	Pemilik Proses	Pernyataan Pindaan/Baharu		Tambahan (T)/ ~~Pemotongan~~ (P)
		Asal	Baharu	
		~~combination of Hydrocarbons and Nitrogent Oxides shall not exceed the following standard:~~		

~~Reference Mass (rw) (kg)~~	~~Carbon Monoxide g/test~~	~~Combined Emission of Hydrocarbons and Nitrogen Oxides in g/test~~
~~rw < 1020~~	~~58~~	~~19.0~~
~~1020 < rw < 1250~~	~~67~~	~~20.5~~
~~1250 < rw < 1470~~	~~76~~	~~22.0~~
~~1470 < rw < 1700~~	~~84~~	~~23.5~~
~~1700 < rw < 1930~~	~~93~~	~~25.0~~
~~1930 < rw < 2150~~	~~101~~	~~26.5~~
~~2150 < rw~~	~~110~~	~~28.0~~

~~as measured by the Economic Commission for Europe ("ECE") regulation No. 15.04 annexed to the United Nations Agreement which was done at Geneva on March 20, 1958 Concerning the Adoption of Uniform Conditions of Approval and Reciprocal Recognition of Approval for Motor Vehicle Equipment and Parts.~~

~~**Second Schedule**~~

~~Emission standard of pollutant under sub-regulation 4(3) is prescribed in the Second Schedule.~~

No. CPD	Pemilik Proses	Pernyataan Pindaan/Baharu		Tambahan (T)/ ~~Pemotongan~~ (P)
		Asal	Baharu	
		~~**Third Schedule**~~ ~~Emission standard of pollutant under sub-regulation 4(4) is prescribed in the Second Schedule.~~ ~~**Fourth Schedule**~~ ~~Emission standards for petrol engine in use for existing model is 4.5% (carbon monoxide), 800 ppm (hydrocarbon and for new model is 3.5% (carbon monoxide), 600 ppm.~~ ~~**Fifth Schedule**~~ ~~Emission test for petrol engine in use as follows:-~~ ~~1. This test shall be carried out by using a Carbon Monoxide or Hydrocarbon analyser.~~ ~~2. The test procedures shall be as follows:-~~ ~~a. accelerate the engine to a moderate speed with no load, maintain for at least 15 seconds, then return the engine to idle speed;~~ ~~b. while the engine idles, insert the sampling probe into the exhaust pipe as deeply as possible but in any case for not less than 300mm;~~ ~~c. wait for at least 20 seconds and take the reading of Carbon Monoxide and Hydrocarbon as given by the analyser.~~		
		~~**ENVIRONMENTAL QUALITY (REFRIGERANT MANAGEMENT) REGULATIONS 1999**~~ ~~**[P.U.(A) 451/99]**~~ ~~**Prohibition on the use of refrigerant environmentally hazardous**~~		**P**

No. CPD	Pemilik Proses	Pernyataan Pindaan/Baharu		Tambahan (T)/ ~~Pemotongan~~ (P)
		Asal	Baharu	
		~~**substance**~~ ~~**Regulation 4.**~~ ~~The use of refrigerant environmentally hazardous substance is prohibited.~~ ~~**Handling of refrigerant environmentally hazardous substance.**~~ ~~**Regulation 5**~~ ~~The University's employees shall not handle any refrigerant environmentally hazardous substance unless he has received the approved training~~ ~~**Offence to vent refrigerant environmentally hazardous substance.**~~ ~~**Regulation 6**~~ ~~The University's employees shall not vent any refrigerant environmentally hazardous substance into the Atmosphere.~~ ~~**Prohibition on moving refrigerant environmentally hazardous substance out of Malaysia.**~~ ~~**Regulation 7(1)**~~ ~~The University's employees shall not move a refrigerant environmentally hazardous substance out of Malaysia.~~ ~~**Schedule**~~ ~~Refrigerant environmentally hazardous substances are as follows:~~		

<table>
<tr><th rowspan="2">No. CPD</th><th rowspan="2">Pemilik Proses</th><th colspan="2">Pernyataan Pindaan/Baharu</th><th rowspan="2">Tambahan (T)/ ~~Pemotongan~~ (P)</th></tr>
<tr><th>Asal</th><th>Baharu</th></tr>
<tr><td></td><td></td><td>
<table>
<tr><th><strike>Group</strike></th><th><strike>Chemical Formula</strike></th><th><strike>Substance</strike></th></tr>
<tr><td><strike>1</strike></td><td><strike>CFCl3</strike></td><td><strike>Triklorofluorometana (CFC - 11)</strike></td></tr>
<tr><td></td><td><strike>CF2Cl2</strike></td><td><strike>DikIorodifluorometana (CFC - 12)</strike></td></tr>
<tr><td></td><td><strike>C2F3Cl3</strike></td><td><strike>TrikIorotrifluoroetana (CFC - 113)</strike></td></tr>
<tr><td></td><td><strike>C2F4Cl2</strike></td><td><strike>DikIorotetrafluoroetana (CFC - 114)</strike></td></tr>
<tr><td></td><td><strike>C2F5Cl</strike></td><td><strike>Kloropentafluoroetana (CFC - 115)</strike></td></tr>
</table>
</td><td></td><td></td></tr>
<tr><td></td><td></td><td><strike>ENVIRONMENTAL QUALITY (COMPOUNDING OF OFFENCES) (OPEN BURNING) RULES 2000</strike>
<strike>[P.U.(A) 310/2000]</strike>

<strike>Compoundable offence</strike>
<strike>Rule 2</strike>
<strike>Any offence of open burning under section 29A or 29B of the Environmental Quality Act 1974 is a compoundable offence</strike></td><td></td><td>P</td></tr>
<tr><td></td><td></td><td><strike>ENVIRONMENTAL QUALITY (CONTROL OF EMISSION FROM MOTORCYCLES) REGULATIONS 2003</strike>
<strike>[P.U.(A) 464/2003]</strike></td><td></td><td>P</td></tr>
</table>

No. CPD	Pemilik Proses	Pernyataan Pindaan/Baharu		Tambahan (T)/ ~~Pemotongan~~ (P)
		Asal	Baharu	
		~~**Idling gaseous emission limit for motorcycle in use.**~~ ~~**Regulation 10.**~~ ~~1. The University or employees of the University riding any motorcycle in use the engine type of which is as prescribed in column 4(a) of the First Schedule shall ensure that such motorcycle in use does not emit gaseous pollutant exceeding the emission limit as prescribed in the Fourth Schedule.~~ ~~2. In the event of breach, shall on conviction be liable to a fine not exceeding RM 5000.~~ ~~**Engine to be switched off in enclosed area.**~~ ~~**Regulation 11**~~ ~~The University's employees shall not allow the engine of any motor vehicle to run while the motor vehicle is stationary for more than three minutes in an enclosed or a partially enclosed parking area or any terminus~~ ~~**FIRST SCHEDULE**~~ ~~**Gaseous emission limit**~~		

No. CPD	Pemilik Proses	Pernyataan Pindaan/Baharu		Tambahan (T)/ ~~Pemotongan~~ (P)
		Asal	Baharu	

(1) *Category of Motorcycle*	(2) *Type Approval Gaseous Emission Test*		(3) *Emission Limits*	(4) *Idling Gaseous Emission Test*		(5) *Emission Limits*
	(a) Engine Type	*(b) Date Of Operation*		*(a) Engine Type*	*(b) Date Of Operation*	
1. Imported						
(a) New model	2 and 4 stroke	1-1-2005	Second Schedule	2 and 4 stroke	1-1-2004	Fourth Schedule
~~*(b)* Current model~~	~~2 and 4 stroke~~	~~1-7-2005~~	~~Second Schedule~~	~~4 stroke~~	~~1-1-2004~~	~~Fourth Schedule~~
2. Locally manufactured or assembled						
(a) New model	2 and 4 stroke	1-7-2005	Second Schedule	2 and 4 stroke	1-1-2004	Fourth Schedule
(b) Current model	2 and 4 stroke	1-7-2006	Second Schedule	2 and 4 stroke	1-1-2004	Fourth Schedule
3. Motorcycle in use	—	—	—	4 stroke	1-1-2004	Fourth Schedule

~~**SECOND SCHEDULE**~~

~~Gaseous emission limit for motorcycle engines~~

~~The emission of Carbon Monoxide (CO), Hydrocarbons (HC) and Nitrogen Oxides (NOx) shall not exceed the following limits as measured~~

No. CPD	Pemilik Proses	Pernyataan Pindaan/Baharu		Tambahan (T)/ ~~Pemotongan~~ (P)
		Asal	**Baharu**	
		~~by The European Economic Committee ("EEC") Council Directive 97/24/EC of 17 June 1997 on the approximation of the laws of the member states relating to the measures to be taken against air pollution caused by two or three wheel motor vehicles:-~~		

~~*e*~~	~~*CO (g/km)*~~	~~*HC (g/km)*~~	~~*N*~~
	~~8~~	~~4~~	
	~~13~~	~~3~~	

~~**FOURTH SCHEDULE**~~

~~Idling gaseous emission limits for motorcycle engines which is as prescribed in the First Schedule is 4.5% Carbon Monoxide *(CO)*.~~

~~**FIFTH SCHEDULE**~~

~~Idling gaseous emission test for motorcycle engines are as follows:-~~

~~1. This test shall be carried out by using a carbon monoxide analyzer which is capable of measuring carbon monoxide in percentage.~~

~~2. The test procedures shall be as follows:~~

~~a. accelerate the engine to a moderate speed with no load, maintain for at least 15 seconds, then return the engine to idle speed;~~

~~b. while the engine idles, insert the sampling probe into the exhaust pipe as deeply as possible but in any case for not less than 300 mm; and~~

~~c. wait for at least 20 seconds and take the reading of carbon monoxide as given by the analyzer.~~

No. CPD	Pemilik Proses	Pernyataan Pindaan/Baharu		Tambahan (T)/ ~~Pemotongan~~ (P)
		Asal	Baharu	
		~~**FOOD ACT 1983**~~ ~~**[ACT 281]**~~ ~~**Food containing substances injurious to health**~~ ~~**Section 13 (1)**~~ ~~Any person who prepares or sells any food that has in or upon it any substance which is poisonous, harmful or otherwise injurious to health commits an offence and shall be liable, on conviction, to a fine not exceeding one hundred thousand ringgit or to imprisonment for a term not exceeding ten years or to both.~~ ~~**Food unfit for human consumption**~~ ~~**Section 13A**~~ ~~1. Any person who prepares or sells any food that consists wholly or in part of:-~~ ~~a. any diseased, filthy, decomposed or putrid animal or vegetable substance;~~ ~~b. any portion of an animal unfit for food; or~~ ~~c. the product of an animal which has died otherwise than by slaughter or as game,~~ ~~2. & 3. Committing an offence liable to punishment of a fine not exceeding thirty thousand ringgit or to imprisonment for a term not exceeding five years or to both.~~ ~~**Adulterated food**~~ ~~**Section 13B**~~ ~~1. Prohibition of preparing or selling of any adulterated food~~		

No. CPD	Pemilik Proses	Pernyataan Pindaan/Baharu		Tambahan (T)/ ~~Pemotongan~~ (P)
		Asal	Baharu	
		~~4. Committing an offence shall be liable, on conviction, to a fine not exceeding twenty thousand ringgit or to imprisonment for a term not exceeding five years or to both.~~ ~~**Labelling, *etc*., not complying with standard of food**~~ ~~**Section 15**~~ ~~Requirement to comply with food labelling if the University prepares packages, labels or advertises any food.~~ ~~**False labelling, *etc*.**~~ ~~**Section 16**~~ ~~False labelling of any food is an offence and liable to imprisonment of not exceeding three years or to fine or to both.~~ ~~**Advertisement**~~ ~~**Section 17**~~ ~~Advertisement on the sale of any food shall not mislead and shall be in accordance with section 17 (1)(a) (d).~~ ~~**Sales, *etc*., by agent or servant**~~ ~~**Section 24**~~ ~~The law presume any person preparing or advertise or selling of any food in University to do so in his account or as agent of the University.~~ ~~**Presumption for human consumption**~~ ~~**Section 25**~~ ~~Any food is sold or exposed or offered for sale it shall be deemed to be safe for human consumption.~~		

No. CPD	Pemilik Proses	Pernyataan Pindaan/Baharu		Tambahan (T)/ ~~Pemotongan~~ (P)
		Asal	Baharu	
		~~**Liability of importer, manufacturer, packer, *etc.***~~ ~~**Section 28**~~ ~~If the University put its name and/or logo on any food packaging, the University is presume to be liable as an importer, manufacturer, packer and etc.~~		
		~~**BUILDING ORDINANCE 1994 (CHAPTER 8) (LAWS OF SARAWAK)**~~ ~~**Short title, commencement and application**~~ ~~**Section (1)(3)(c)**~~ ~~This Ordinance shall not apply to any building or any part thereof, which is, with the approval of the local authority, used for the purpose of such experiment or research as may be approved by that local authority.~~		**P**
		~~**WATER ORDINANCE 1994 (The Water Supply Regulations 1995)**~~ ~~**Regulation 3(3)**~~ ~~**Compliance with Standard**~~ ~~If the University fails to comply with any of the terms or conditions imposed by an authorized officer under this regulation shall be guilty of an offence: Penalty, a maximum fine of five thousand ringgit or imprisonment for up to two years or both as mentioned under regulation 157.~~ ~~**Regulation 4**~~ ~~**Fittings to comply with Regulations**~~ ~~The University shall not, for the purpose of conveying, delivering, receiving, or using water supplied by a water supply authority~~ ~~(*a*) use any water fitting which is of such a nature or is so arranged or connected as to cause or permit, or be likely to cause or permit waste, undue consumption, misuse, erroneous measurement or contamination of~~		**P**

No. CPD	Pemilik Proses	Pernyataan Pindaan/Baharu		Tambahan (T)/ ~~Pemotongan~~ (P)
		Asal	Baharu	
		~~water in the pipes or supply systems, or reverberation or undue pressure fluctuations in pipes;~~ ~~(*b*) use any water fitting which is not in accordance with the requirements of these Regulations as may be applicable; or~~ ~~(*c*) arrange, connect, disconnect, alter or renew any water fitting in contravention against any of these Regulations.~~ ~~**Regulation 5(2)**~~ ~~**Special provision relating to fittings in existence when Regulations commence**~~ ~~If the University fails, after having been given one month's notice in writing by a water supply authority, to alter or renew any such fitting, an authorized officer may enter upon the premises whereon such fitting is situated and make such alteration thereto or to remove the same as may be necessary, and may recover the costs thereby incurred from the University.~~ ~~**Regulation 7(1)**~~ ~~**Restrictions on use of pumps or other apparatus**~~ ~~The University must obtain the written consent from the water supply authority for the instalation of pumps or other apparatus.~~ ~~**Regulation 7(2)**~~ ~~A water supply authority may grant such consent subject to such conditions as it deems fit.~~ ~~**Water treatment chemicals**~~ ~~**Regulation 8**~~ ~~The University must ensure not to use the chemical other than approved by the State Water Authority for the treatment of water and the use of storage of such approved chemicals shall be in accordance to the methods, specifications and practice approved by the State Water~~		

No. CPD	Pemilik Proses	Pernyataan Pindaan/Baharu		Tambahan (T)/ ~~Pemotongan~~ (P)
		Asal	Baharu	
		~~Authority.~~ ~~**Pipes approved by State Water Authority**~~ ~~**Regulation 11**~~ ~~Every service pipe, distribution pipe or mains shall be of materials approved by, and comply with the specifications of the State Water Authority.~~ ~~**Test pressure of pipes**~~ ~~**Regulation 12**~~ ~~Every service pipe or distributing pipe or mains shall be of sufficient strength to withstand a test pressure as specified in the relevant Approved Standard for the appropriate type and class of pipe.~~ ~~**Joints of pipes**~~ ~~**Regulation 13**~~ ~~The joints used for each pipe shall be of the type approved by the State Water Authority.~~ ~~**Ductile iron, cast iron and grey iron pipes**~~ ~~**Regulation 14(1)**~~ ~~Every service pipe or distributing pipe or water mains including spigot, socket, flanged or other fittings shall comply with the relevant Standards listed as Items 1, 2, 3, and 4 in the First Schedule.~~ ~~**Regulation 14(2)**~~ ~~Every pipe and pipe fittings shall be effectively protected against internal and external corrosion according to the requirement of the State Water Authority.~~ ~~**Wrought iron and steel pipes**~~		

No. CPD	Pemilik Proses	Pernyataan Pindaan/Baharu		Tambahan (T)/ ~~Pemotongan~~ (P)
		Asal	Baharu	
		~~**Regulation 15(1)(*a*)**~~ ~~Every service pipe or distributing pipe or mains of wrought iron or steel shall comply with the requirements of the Standard listed as Item 5 in the First Schedule for steel tubes and tubular and shall be not less than the dimensions specified for "heavy tube" in the Second Schedule.~~ ~~**Regulation 15(1)(*b*)**~~ ~~Every pipe shall be efficiently protected against external corrosion and, unless forming part of closed circuit from which water is not drawn, against internal corrosion. Such protection shall comply with the requirements of the State Water Authority.~~ ~~**Regulation 15(2)**~~ ~~Every malleable cast iron fitting used in connection with any such pipe shall comply with the standard of malleable cast iron and cast copper alloy screwed pipe fittings for steam, air, water, gas and oil.~~ ~~**Regulation 15(3)**~~ ~~All pipe threads used in connection with such pipe or associated fittings shall comply with the standard of pipe threads for tubes and fittings where pressure-tight joints are made on the thread.~~ ~~**Polyethylene pipes**~~ ~~**Regulation 16**~~ ~~Every service pipe or distributing pipe or water mains of polyethylene (PE) material shall comply the standard Polyethylene (PE) pipes for water supply. PE pipes of nominal outer diameter of 32 millimetres or smaller shall be of minimum nominal pressure rating of 10 bars and pipes with nominal outer diameter above 32 millimetres shall be of minimum nominal pressure rating of 6 bars. All PE fittings for pipes up to 110 millimetres shall be of the single piece extrusion moulded type.~~		

No. CPD	Pemilik Proses	Pernyataan Pindaan/Baharu		Tambahan (T)/ ~~Pemotongan~~ (P)
		Asal	Baharu	
		~~**Jointing of PE pipes**~~ ~~**Regulation 17**~~ ~~Polyethylene pipes and fittings shall be jointed by electrofusion joints or butt fusion joints or compression joints. Pipes and fittings including stub ends for butt or electrofusion joints must be of compatible materials, suitable for jointing by fusion with each other.~~ ~~**Sleeve for polyethylene pipe**~~ ~~**Regulation 18**~~ ~~Polyethylene pipes crossing drains, streams, concrete apron, pavement or through, a wall must be placed inside a sleeve of welded seamless heavy steel tube, ductile iron pipe or mild steel pipe.~~ ~~**Copper pipes**~~ ~~**Regulation 19(1)**~~ ~~Every service pipe or distributing pipe of copper connected by means of screw joints shall comply with the Standard listed as Item 6 in the First Schedule and the thread of joints shall comply with the standard of threads for light gauge copper tubes and fittings.~~ ~~**Regulation 19(2)**~~ ~~Copper alloy pipe fittings and copper alloy three piece fittings or unions for use with copper pipes with screw thread shall comply with the standard of capillary and compression tube fittings of copper and copper alloy.~~ ~~**Regulation 19(3)**~~ ~~Cast copper alloy pipe fittings for copper pipes with screw thread shall comply with the Standard for malleable cast iron or cast copper alloy fittings as in standartd of malleable cast iron and cast copper alloy screwed pipe fittings for steam, air, water, gas and oil.~~ ~~**Copper pipes for capillary or compression fittings**~~		

No. CPD	Pemilik Proses	Pernyataan Pindaan/Baharu		Tambahan (T)/ ~~Pemotongan~~ (P)
		Asal	Baharu	
		~~**Regulation 20**~~ ~~Every service pipe or distributing pipe of copper to be connected by means of capillary fittings or compression fittings or silver brazing or bronze or autogeneous brazing shall comply with the Standard listed as standard of copper tubes for water, gas and sanitation. For pipes laid underground, half hard straight or annealed copper tubes in coils suitable for underground application shall be used. For pipes not laid under the ground, half hard straight or hard drawn copper tubes shall be used.~~ ~~**Unplasticised polyvinyl chloride (uPVC) pipes**~~ ~~**Regulation 21(1)**~~ ~~Every service pipe or distributing pipe of unplasticised polyvinyl chloride (uPVC) shall comply with Standard listed as Item 8 in the First Schedule. uPVC of 25 millimetres diameter or smaller shall be of minimum Class E and pipes above 25 millimetres diameter shall be of minimum Class D.~~ ~~**Regulation 21(2)**~~ ~~uPVC pipes and fittings are to be jointed by solvent cement or mechanical joints complying with the Standard of mechanical joints and fittings principally of unplasticised PVC.~~ ~~**Sleeve for uPVC pipe**~~ ~~**Regulation 22**~~ ~~uPVC pipes crossing drains, streams, concrete apron, pavement or through a wall must be placed inside a sleeve of welded seamless heavy steel tube, ductile iron pipe or mild steel pipe.~~ ~~**Stainless steel pipes**~~ ~~**Regulation 23**~~ ~~Every service pipe or distributing pipe of stainless steel shall comply with the Standard listed as seamless and welded austenitic stainless steel pipes and tubes for pressure purposes.~~		

No. CPD	Pemilik Proses	Pernyataan Pindaan/Baharu		Tambahan (T)/ ~~Pemotongan~~ (P)
		Asal	Baharu	
		~~**Any other pipes materials**~~ ~~Regulation 24~~ ~~Pipes of any material not specifically mentioned or provided for in these Regulations must be approved by the State Water Authority before it can be used as service pipe or distributing pipe. The pipe and system shall be able to withstand field test pressure of 18 bars or twice the working pressure, whichever is the greater. Such pipe shall not have any adverse effect on water quality and must have documents, proofs or certificates from recognised Institution to substantiate its suitability for conveyance of potable water.~~ ~~**Lead pipes not to be used**~~ ~~**Regulation 25**~~ ~~No service pipe or distributing pipe or water main or pipe fittings shall be of lead or lead alloy.~~ ~~**Types and classes of pipes approved**~~ ~~**Regulation 26**~~ ~~The types and classes of pipes approved for use by the State Water Authority are shown below:~~ ~~(*a*) Asbestos cement pipes; Class 20 and Class 25.~~ ~~(*b*) Ductile Iron Pipes: Class K9.~~ ~~(*c*) Polyethylene Pipe: PN6 and PN10. (High Density)~~ ~~(*d*) uPVC Pipes: Class 'D' for 32 mm diameter and above. Class 'E' for 25 mm diameter and below.~~ ~~(*e*) Welded and seamless steel pipes (screwed-type). All classes: Light, Medium, Heavy).~~ ~~(*f*) Welded and seamless carbon steel pipes for general pressure purpose.~~ ~~**Water mains laying specification, approved by the water supply authority**~~ ~~**Regulation 27**~~ ~~All pipes and water mains are to be installed and constructed by pipe~~		

No. CPD	Pemilik Proses	Pernyataan Pindaan/Baharu		Tambahan (T)/ ~~Pemotongan~~ (P)
		Asal	Baharu	
		~~fitters or mainslayers licensed by the State Water Authority and shall comply with all requirements and specifications approved by a water supply authority.~~ ~~**Compliance with standards**~~ ~~**Regulation 28**~~ ~~All designs and specifications, the type of fittings and the installation shall be in accordance with the requirements of a water supply authority. A water supply authority may require that relevant documents be submitted for approval prior to the commencement of any construction or installation works.~~ ~~**Support and alignment**~~ ~~**Regulation 29**~~ ~~Every pipe shall be firmly supported in proper position and in correct alignment to prevent air locks, movement or reverberation in the pipe.~~ ~~**Bends and curves in pipes**~~ ~~**Regulation 30**~~ ~~No bend or curve in any pipe shall be made so as to materially diminish the waterway or alter the internal diameter of the pipe.~~ ~~**Underground pipes, *etc*.**~~ ~~**Regulation 31**~~ ~~Every pipe laid under the ground shall be reasonably protected from corrosion and risk of injury. Pipes that are not beneath a building, shall be laid with a minimum cover depth of 600 millimetres for pipes under roadway and pavement and 500 millimetres for all other pipes:~~ ~~Provided that this regulation shall not apply to any pipe which is used only for a temporary purpose.~~		

No. CPD	Pemilik Proses	Pernyataan Pindaan/Baharu		Tambahan (T)/ ~~Pemotongan~~ (P)
		Asal	Baharu	
		~~**Protection of pipes generally**~~ ~~**Regulation 32(1)**~~ ~~Every pipe laid or installed shall be of suitable corrosion-resistant material or effectively protected against corrosion or deterioration in the environment in which the pipe is laid or installed.~~ ~~**Regulation 32(2)**~~ ~~No pipe shall be so laid into or through any landfill, ash pit or manure pit, sewer, drain or cesspool, or any manhole connected therewith. Pipes shall not be laid through or allowed to remain in contact with any foul soil or any material of such a nature that is likely to cause undue deterioration of such pipe. Where the laying of any such pipe through foul soil or injurious material cannot be avoided, the pipe shall be effectively protected from contact with such soil or material either by an external corrosion resisting sleeve or tape or by some other approved protection.~~ ~~**Regulation 32(3)**~~ ~~Every pipe that is in a position which renders it susceptible to damage shall be provided with proper and adequate protection.~~ ~~**Protection of water fittings**~~ ~~**Regulation 33**~~ ~~Every water fitting, other than a warning pipe or other overflow pipe, laid or fixed in such a position, whether inside or outside a premises, as to render it liable to damage or injury from any cause, shall be properly and adequately protected from such damage or injury:~~ ~~Provided that this regulation shall not apply to any pipe used only for a temporary purpose.~~ ~~**Accessibility of water fittings**~~ ~~**Regulation 34**~~ ~~Every water fitting within a building shall, so far as is reasonably practicable, be so placed as to be readily accessible for examination,~~		

No. CPD	Pemilik Proses	Pernyataan Pindaan/Baharu		Tambahan (T)/ ~~Pemotongan~~ (P)
		Asal	Baharu	
		~~repair or replacement:~~ ~~Provided that pipes may be runned in chases on the inner or upper surface of walls and floors and may be embedded therein in mortar and covered with plaster, tiling or other finishes but shall not be cast into concrete floors or walls as part of the floor or wall.~~ ~~**Pipes not to convey water not supplied by the water supply authority**~~ ~~**Regulation 35**~~ ~~No service pipe or distributing pipe used for the conveyance of water supplied by a water supply authority and no cistern used for the reception of such water shall be used, or so connected that it can be used for the conveyance or reception of any water which is not supplied by that water supply authority or which though supplied by that water supply authority has, prior to its conveyance by such pipe or its reception by such cistern, been used for any purpose:~~ ~~Provided that where the water supplied from the water supply authority's mains to any cistern is discharged into the air not less than 150 millimetres above the top edge or top of overflow level of such cistern this regulation shall not apply to such cistern or to any distributing pipe leading therefrom.~~ ~~**Connection to water-closet or urinal**~~ ~~**Regulation 36**~~ ~~No pipe, other than a flushing pipe leading from a flushing apparatus, shall deliver water to the pan of any water-closet or to any urinal.~~ ~~**Service pipe not to be connected to distributing pipe**~~ ~~**Regulation 37**~~ ~~No service pipe shall be connected to a distributing pipe, or to a pump suction or delivery pipe.~~ ~~**Standard of fittings**~~		

No. CPD	Pemilik Proses	Pernyataan Pindaan/Baharu		Tambahan (T)/ ~~Pemotongan~~ (P)
		Asal	Baharu	
		~~**Regulation 38**~~ ~~All specials and fittings connected with any pipe shall be of Approved Standard and rated for and capable of withstanding the test pressure to which the pipe will be subjected.~~ ~~**Pipework arrangement**~~ ~~**Regulation 39**~~ ~~Sufficient long screws, unions or fittings of similar nature, shall be provided in all service and distributing pipes to allow for the replacing of faulty piping without excessive damage to pipeworks and premises.~~ ~~**Submarine mains**~~ ~~**Regulation 40**~~ ~~Submarine mains and pipelines shall be subjected to pressure and leakage tests prior to launching into the streams or rivers and all testing and launching procedures shall comply with the requirements specified by a water supply authority.~~ ~~**Testing of watermains for acceptance**~~ ~~**Regulation 41**~~ ~~Testing of completed watermains for purpose of acceptance by a water supply authority must be carried out in the presence of an authorised officer and the test will deem to have been passed, if it satisfies all the requirements specified by these Regulations.~~ ~~**Stop tap**~~ ~~**Regulation 42**~~ ~~Every service pipe shall be provided with a stop tap by a water supply authority. The stop tap shall be connected to the inlet side of the meter in a position to be fixed and determined by a water supply authority. If placed below ground or where the water supply authority deems necessary, that water supply authority may require the consumers to~~		

No. CPD	Pemilik Proses	Pernyataan Pindaan/Baharu		Tambahan (T)/ ~~Pemotongan~~ (P)
		Asal	Baharu	
		~~construct a covered box with suitable removal cover or other suitable chamber for the stop tap:~~ ~~Provided that a stop tap in private premises shall be placed as near as is reasonably practicable to the point from which the service pipe enters those premises and on the side of the meter near the main.~~ ~~**Inside stop valves**~~ ~~**Regulation 43**(1)~~ ~~In addition to any stop tap fitted by a water supply authority in pursuance of regulation 42, every service pipe supplying water to any premises, or to any part of a premise, the supply to which is separately chargeable, shall be fitted with a stop valve, and as near as practicable to the meter and on the consumer's side of the meter.~~ ~~**Regulation 43**(2)~~ ~~Where a premise consists of two or more storeys then every service or distributing pipe supplying water to each storey of the premise shall be fitted with a stop valve inside and as near as practicable to the point of entry of where the service or distributing pipe enters each storey of the premise.~~ ~~**Regulation 43**(3)~~ ~~Where a building consist of flats, flatted factory units or other separately occupied units, then every service or distributing pipe supplying water to each flat, factory or unit shall be fitted with a stop valve as near as is reasonably practicable to the point where the service or distributing pipe enters each flat, factory or unit.~~ ~~**Regulation 43**(4)~~ ~~No stop valve fitted in accordance with this regulation shall be a plug cock or plug valve.~~		

No. CPD	Pemilik Proses	Pernyataan Pindaan/Baharu		Tambahan (T)/ ~~Pemotongan~~ (P)
		Asal	Baharu	
		~~**Regulation 43**(4)~~ ~~Every valve or tap shall comply with any of the Standards listed as Items 23, 24, 25 or 26 in the First Schedule.~~ ~~**Stop valve on outlet pipe**~~ ~~**Regulation 44**~~ ~~A stop valve shall be fitted on every outlet pipe other than a warning pipe, from a storage cistern and as near to the cistern as practicable.~~ ~~**Draw-off taps**~~ ~~**Regulation 45(1)**~~ ~~Every draw-off tap of either bib, pillar, globe, stop and ball types or parts of such taps shall be of the type approved by the State Water Authority.~~ ~~**Regulation 45(2)**~~ ~~Every draw-off tap of the normal screw-down pattern shall comply with the Standard listed as Item 24 in the First Schedule.~~ ~~**Regulation 45(3)**~~ ~~Every draw-off tap not of the normal screw-down pattern, must be capable of withstanding a hydrostatic test pressure of 20 bars and every valve, spindle, and other internal part and the body, shall be made of a corrosion-resistant material.~~ ~~**Air valves installation**~~ ~~**Regulation 46**~~ ~~Air valves shall be provided and installed according to the requirements of a water supply authority.~~ ~~**Surface boxes**~~ ~~**Regulation 47**~~ ~~Surface boxes for hydrants, sluice valves and air valves on road surfaces,~~		

No. CPD	Pemilik Proses	Pernyataan Pindaan/Baharu		Tambahan (T)/ ~~Pemotongan~~ (P)
		Asal	Baharu	
		~~concrete pavement and footpath shall be of the heavy duty class, complying with the Standard stipulated as Item 44 in the First Schedule.~~ ~~**Joints for suspended pipes**~~ ~~**Regulation 48**~~ ~~Where pipes have with unsupported section exceeding a single pipe length, the joints for the unsupported section, shall be of the flanged joint or welded joint or screwed joint.~~ ~~**Ball valves**~~ ~~**Regulation 49(1)**~~ ~~Every ball valve of piston or diaphragm type shall comply with the Standard listed as Item 26 in the First Schedule.~~ ~~**Regulation 49(2)**~~ ~~Every ball valve shall comply with the following requirements:~~ ~~(*a*) every ball tap or valve shall close against a working pressure of 14 bars, and while held mechanically in the closed position, shall be capable of withstanding a pressure of 20 bars;~~ ~~(*b*) the valve shall be provided with a washer of good quality rubber or some other equally suitable material enclosed in an internally flanged cap screwed to the piston;~~ ~~(*c*) all parts of the valve shall be of a corrosion-resistant material; the lever shall be of material and dimensions of sufficient rigidity so that it will not bend under working conditions, and the float shall be of copper or suitable corrosion-resistant material;~~ ~~(*d*) copper float shall comply with the Standard listed as Item 28 in the First Schedule;~~ ~~(*e*) plastic float shall be used only for cold water systems and shall comply with Standard listed as Item 29 in the First Schedule.~~		

No. CPD	Pemilik Proses	Pernyataan Pindaan/Baharu		Tambahan (T)/ ~~Pemotongan~~ (P)
		Asal	Baharu	
		~~**Ball valve installation**~~ ~~**Regulation 50**~~ ~~Every ball valve fitted to a storage cistern or a flushing system shall be securely and rigidly fixed thereto above the water-line, and shall be supported independently of the inlet pipe (unless such inlet pipe is itself rigid and rigidly fixed to the cistern), in such a position that no part of the body of the tap or valve will be submerged when the cistern is charged to its overflowing level.~~ ~~**Air hole in outlet chambers of ball valve**~~ ~~**Regulation 51**~~ ~~Where a ball valve is provided with a pipe so arranged as to discharge water into a cistern below its overflowing level, an air hole shall be provided in the outlet chamber of the tap or valve above such level and of a size sufficient to prevent back siphonage of water through the valve.~~ ~~**Positions of draw-off taps**~~ ~~**Regulation 52**~~ ~~An authorized officer may direct that any tap or taps on any premises supplied with water from the mains shall be removed or placed in or shifted to such positions within the premises as will most effectively prevent waste and may refuse to supply or to continue to supply water to such premises until such directions are complied with.~~ ~~**Draw-off taps on service pipes**~~ ~~**Regulation 53(1)**~~ ~~An efficient draw-off tap or taps of a screw-down type shall be provided on the service pipe in every premises for drawing off water for drinking or cooking purposes.~~ ~~**Regulation 53(2)**~~ ~~A draw-off tap on service pipes shall be so fixed that their outlets are at least 35 millimetres above the top edge of any tub, jar or sink into which the water may discharge.~~		

No. CPD	Pemilik Proses	Pernyataan Pindaan/Baharu		Tambahan (T)/ ~~Pemotongan~~ (P)
		Asal	Baharu	
		~~**Attachment to draw-off taps on service pipes**~~ ~~**Regulation 54**~~ ~~No attachment or fitting except of a type approved by the water supply authority shall be fixed to the outlet of any tap on a service pipe to act as a means of silencing the discharge or preventing the splashing of water from the tap.~~ ~~**Provision of storage cisterns**~~ ~~**Regulation 55**~~ ~~Storage cisterns shall be provided according to these Regulations, when required by the water supply authority.~~ ~~**Storage cistern**~~ ~~**Regulation 56**~~ ~~Every storage cistern shall be watertight, of adequate strength, properly and securely supported and shall be constructed of corrosion-resistant materials approved by the State Water Authority.~~ ~~**Mild steel storage cistern**~~ ~~**Regulation 57**~~ ~~Every storage cistern of galvanised mild steel and having a capacity not exceeding 4500 litres shall comply with the requirements for Grade A cisterns contained in the Standard listed as Item 30 in the First Schedule.~~ ~~**Polyethelene or polypropylene storage cistern**~~ ~~**Regulation 58**~~ ~~Every storage cistern of polyethylene or polypropylene shall comply with the Standard listed as Item 34 in the First Schedule.~~ ~~**Positioning of storage cistern for domestic supply**~~ ~~**Regulation 59**~~ ~~Every storage cistern shall comply with the following:~~		

No. CPD	Pemilik Proses	Pernyataan Pindaan/Baharu		Tambahan (T)/ ~~Pemotongan~~ (P)
		Asal	Baharu	
		~~(*a*) be located in a position such that the water therein will not be prone or susceptible to contamination;~~ ~~(*b*) easily accessible for the purpose of inspection, cleaning and maintenance of the interior and exterior;~~ ~~(*c*) provided with a vermin and insect proof but not air tight cover;~~ ~~(*d*) properly and securely supported.~~ ~~**Ball valve and inlet to storage cistern**~~ ~~**Regulation 60(1)**~~ ~~Every inlet to a storage cistern shall be fitted with a stop valve and a ball valve or some other approved device for controlling the inflow of water so designed to prevent overflow.~~ ~~**Regulation 60(2)**~~ ~~Every supply pipe whether fitted with ball valve or otherwise shall be fitted such that the bottom of the inlet orifice shall be above the top of the overflow opening by a minimum of 50 millimetres or twice the diameter of the supply pipe, whichever is the greater.~~ ~~**Regulation 60(3)**~~ ~~Where a ball valve is fitted, the size of the orifice, size and shape of float and dimensions of the lever shall be such that when the float is immersed not exceeding half its volume, the ball valve shall be watertight against a hydrostatic pressure of 14 bars or twice the highest working pressure, whichever is the greater.~~ ~~**Regulation 60(4)**~~ ~~Every ball valve shall be securely and rigidly fixed to the cistern.~~ ~~**Storage capacity requirement**~~ ~~**Regulation 61**~~ ~~Every storage cistern required to be installed, shall have the following minimum capacities for each of the categories of premise stipulated~~		

No. CPD	Pemilik Proses	Pernyataan Pindaan/Baharu		Tambahan (T)/ ~~Pemotongan~~ (P)
		Asal	Baharu	
		~~below:~~ ~~*Category of Buildings*~~ ~~*Minimum Storage Capacity Requirements (Litres)*~~ ~~Residential houses, apartment, flat (per unit)~~ ~~700~~ ~~Rural houses, low cost houses (Approved) by Government) (per unit)~~ ~~400~~ ~~Shophouse (per floor)~~ ~~400~~ ~~Hotels (per room)~~ ~~400~~ ~~Hostels and Boarding School (per resident)~~ ~~250~~ ~~Days Schools (per head per session) Others~~ ~~30~~ ~~Others~~ ~~One day's estimated demand or volume to be determined by a water supply authority.~~ ~~**Cold water storage cistern not exceeding 4500 litres**~~ ~~**Regulation 62 (a)**~~ ~~Every cold water storage cistern of a capacity not exceeding 4500 litres shall be fitted with an overflow pipe which shall also function as a warning pipe and the overflow pipe shall discharge from a conspicuous position.~~ ~~**Regulation 62(*b*)**~~ ~~The internal diameter of the overflow pipe of every cold water storage cistern of a capacity not exceeding 4500 litres shall be not less than 1.5 times the internal diameter of the inlet pipe and in no case less than 20 millimetres.~~		

No. CPD	Pemilik Proses	Pernyataan Pindaan/Baharu		Tambahan (T)/ ~~Pemotongan~~ (P)
		Asal	Baharu	
		~~**Regulation 62(c)**~~ ~~The overflow level of every cold water storage cistern of a capacity not exceeding 4500 litres of the warning pipe shall be set~~ ~~(i) below the top edge of the cistern at a distance of not lessthan twice the diameter of the overflow pipe; and~~ ~~(ii) above the water-line at a distance of not less than 25 mm or not less than the internal diameter of the warning pipe, whichever is the greater; and~~ ~~**Regulation 62(*d*)**~~ ~~A scour pipe of every cold water storage cistern of a capacity not exceeding 4500 litres with a stop valve shall be provided to allow the complete draining of the cistern and the stop valve shall be located in a convenient position and the scour pipe shall discharge into an appropriate point.~~ ~~**Cold water storage cistern of more than 4500 litres**~~ ~~**Regulation 63(a)**~~ ~~Every cold water storage cistern of a capacity exceeding 4500 litres shall be fitted with an efficient overflow pipe, and if such overflow pipe is not a warning pipe, shall also be fitted with an efficient warning pipe or some other effective device so arranged as to indicate when the water in the cistern reaches the overflowing level;~~ ~~**Regulation 63(*b*)**~~ ~~Every cold water storage cistern of a capacity exceeding 4500 litres where the overflow pipe is also the warning pipe; the pipe shall comply with the requirements of paragraphs (*b*) and (*c*) of regulation 62.~~ ~~**Regulation 63(*c*)**~~ ~~Every cold water storage cistern of a capacity exceeding 4500 litres where both a warning pipe and an overflow pipe other than a warning pipe are fitted the internal diameter of the warning pipe shall be not less than 25 mm.~~		

No. CPD	Pemilik Proses	Pernyataan Pindaan/Baharu		Tambahan (T)/ ~~Pemotongan~~ (P)
		Asal	Baharu	
		~~**Regulation 63(*d*)**~~ ~~A scour pipe shall be fitted to the lowest point of the cistern. The stop valve of this scour pipe shall be located in a convenient position and the scour pipe shall discharge into a drain.~~ ~~**Storage Cistern not to be sunk in ground**~~ ~~**Regulation 64 (a)**~~ ~~No storage cistern shall be buried or sunk in the ground unless the cistern is constructed of corrosion-resistant material according to approved standards and specifications or designs approved by the State Water Authority;~~ ~~**Regulation 64 (*b*)**~~ ~~No storage cistern shall be buried or sunk in the ground unless the cistern is located in a position that is not susceptible to flooding;~~ ~~**Regulation 64 (*c*)**~~ ~~No storage cistern shall be buried or sunk in the ground unless the top edge of the cistern be not less than 250 mm above general ground level in the area;~~ ~~**Regulation 64 (*d*)**~~ ~~No storage cistern shall be buried or sunk in the ground unless the cistern is fitted with an efficient warning or overflow pipe or an approved overflow pipe or an approved overflow warning device or mechanism;~~ ~~**Regulation 64 (*e*)**~~ ~~No storage cistern shall be buried or sunk in the ground unless the water from the water supply authority's mains is discharged into the cistern at a level not less than 150 mm above the invert of the overflow pipe; and~~ ~~**Regulation 64 (*f*)**~~ ~~No storage cistern shall be buried or sunk in the ground unless the cistern~~		

No. CPD	Pemilik Proses	Pernyataan Pindaan/Baharu		Tambahan (T)/ ~~Pemotongan~~ (P)
		Asal	Baharu	
		~~is not likely to result in waste, undue consumption, misuse or contamination of the water.~~ ~~**Supply to hot water apparatus**~~ ~~**Regulation 65**~~ ~~Any hot water supply apparatus, in or by which water supplied by a water supply authority is heated, shall be supplied either from a cold water storage cistern or from a service pipe. Where cold water is from a service pipe, the supply pipe shall be controlled by a stop tap and shall not be connected directly to the apparatus but shall discharge into the air not less than 25 millimetres above the overflow level of the apparatus:~~ ~~Provided that this regulation shall not apply in the case of:~~ ~~(*a*) a thermostatically controlled electric storage water heater of a capacity not exceeding 25 litres;~~ ~~(*b*) a gas geyser or multipoint heater of capacity not exceeding 50 litres, fitted with an efficient back siphonage prevention device and with the inlet valve automatically controlling water so that no leakage of gas or water can occur;~~ ~~(*c*) an instantaneous heater.~~ ~~In every case, the apparatus is not subjected to a working pressure higher than that for which it is designed, is controlled by a stop valve inlet and every discharge point is in the open air above the overflowing level of any pool, lavatory, basin, sink, or other appliance.~~ ~~**Hot water apparatus outlet connection**~~ ~~**Regulation 66**~~ ~~No hot water supply apparatus connected to a service pipe shall have any connection on its outlet side with any water fittings containing water supplied other than through the hot water supply apparatus.~~		

No. CPD	Pemilik Proses	Pernyataan Pindaan/Baharu		Tambahan (T)/ ~~Pemotongan~~ (P)
		Asal	Baharu	
		~~**Mixing valves**~~ ~~**Regulation 67 (a)**~~ ~~Mixing valve, combination taps or other water fittings in which hot and cold water are mixed shall not be used unless both the hot water apparatus and the other source are supplied with water direct from a service pipe from the mains of a water supply authority;~~ ~~**Regulation 67 (b)**~~ ~~Mixing valve, combination taps or other water fittings in which hot and cold water are mixed shall not be used unless both the hot water apparatus and the other source are supplied with water from the mains of a water supply authority through a feed cistern.~~ ~~**Level of outlets of feed cistern supplying cold water to hot water apparatus**~~ ~~**Regulation 68**~~ ~~Where a feed cistern, in addition to supplying cold water to a hot water supply apparatus, is used as a storage cistern for any other purpose, any outlet for any such other purpose shall be at the same level as the outlet to the hot water apparatus.~~ ~~**Hot water pipe materials**~~ ~~**Regulation 69**~~ ~~Every pipe used for conveying hot water shall be of galvanised steel, galvanised wrought iron, copper, stainless steel or other approved corrosion-resistant material.~~ ~~**Maximum distance of taps from hot water apparatus**~~ ~~**Regulation 70**~~ ~~No tap used for the purpose of drawing hot water shall be fixed at a greater distance, measured along the axis of the pipe by which the tap is supplied, from a hot water apparatus or hot water cistern, cylinder or tank,~~		

No. CPD	Pemilik Proses	Pernyataan Pindaan/Baharu		Tambahan (T)/ ~~Pemotongan~~ (P)
		Asal	Baharu	
		~~or from a flow and return system, than the distance appropriate to the largest nominal diameter of any part of such pipe as shown in the following:~~ ~~*Largest Nominal Diameter*~~ ~~*Distance of Pipe*~~ ~~Not exceeding 15 mm 24 metres~~ ~~Exceeding 15 mm but not exceeding 25 mm 18 metres~~ ~~Exceeding 25 mm 12 metres~~ ~~Provided that in hospitals, hotels, factories or other similar premises and institutions, where the pipe by which the tap is supplied is effectively lagged against loss of heat to the satisfaction of a water supply authority, the water supply authority may approve the fixing of taps at distances in excess of the maximum stated in the above table.~~ ~~**Hot water pressure vessels**~~ ~~**Regulation 71**~~ ~~Every hot water pressure vessel or tank shall be constructed of stainless steel, copper or other materials approved by the State Water Authority and shall comply with the Standard listed as Item 33, 34, 39, 40 and 42 in the First Schedule.~~ ~~**Tap for drawing water from hot water storage cistern or pressure vessel**~~ ~~**Regulation 72**~~ ~~No tap or other means of drawing water (other than a tap with a removable key for emptying the system for cleaning or repairs) shall be connected to any part of a hot water system in such a way that the level of the water in the cistern, vessel or tank can be lowered by more than one-~~		

No. CPD	Pemilik Proses	Pernyataan Pindaan/Baharu		Tambahan (T)/ ~~Pemotongan~~ (P)
		Asal	Baharu	
		~~fourth of its depth:~~ ~~Provided that:~~ ~~(*a*) in the case of a hot water system in which water is heated only by thermostatically controlled gas or electricity and the storage cistern, vessel or tank has a capacity of not less than 900 litres this regulation shall apply with the substitution of the fraction "three-fourths" for the fraction "one-fourth";~~ ~~(*b*) in the case of a hot water system comprising more than one hot water pressure vessel at different levels this regulation shall apply only to the lowest pressure vessel; and~~ ~~(*c*) this regulation shall not apply in the case of an open vessel in which water is directly heated.~~ ~~**Inlets and outlets of pools, *etc*.**~~ ~~**Regulation 73**~~ ~~Every inlet to a pool, wash basin, sink, or similar fittings shall be distinct from and unconnected with any outlet and every outlet for emptying such pool, wash basin, sink or similar sanitary fittings shall be provided with well-fitting and easily accessible watertight plug or some other equally suitable device for closing the outlet.~~ ~~**Location of point of discharge of water to pool, *etc*.**~~ ~~**Regulation 74**~~ ~~The level of the point of discharge of the hot or cold water to a fixed pool, wash basin, sink or similar fittings shall be not less than 35 millimetres above the centre of the overflow, or if there be no overflow, of the top of the pool, basin or sink:~~ ~~Provided that this regulation shall not apply to any bidet, sitz-pool, slop or sluicing sink or similar apparatus if every pipe conveying hot or cold water to such apparatus is connected to:~~ ~~(*a*) a storage cistern supplying water to such apparatus only; or~~ ~~(*b*) a flushing cistern.~~		

No. CPD	Pemilik Proses	Pernyataan Pindaan/Baharu		Tambahan (T)/ ~~Pemotongan~~ (P)
		Asal	Baharu	
		~~**Flushing system for water closet, *etc.***~~ ~~**Regulation 75**~~ ~~Every water closet, urinal, bidet or similar sanitary fittings shall be provided with a flushing cistern or with some other equally efficient and suitable flushing apparatus.~~ ~~**Single flush cleaning**~~ ~~**Regulation 76**~~ ~~Every water-closet pan shall be so constructed as to be efficiently cleaned by a single flush and shall comply with the relevant Approved Standard.~~ ~~**Flushing cistern to be fitted with ball valve or similar apparatus**~~ ~~**Regulation 77**~~ ~~The inlet pipe of every flushing cistern, not being an automatic flushing cisterns, shall be fitted with a stop valve, and a ball valve or some other effective means of controlling the inflow of water so designed to prevent overflow.~~ ~~**Design of flushing system**~~ ~~**Regulation 78**~~ ~~Every flushing cistern serving a water closet shall be so designed and arranged that the volume of the flush or, in the case of an apparatus designed to give two flushes of different volumes, the volume of the larger flush (excluding the water entering the cistern during a flush) shall not exceed 14 litres and shall comply with the Standard listed as Item 43 in the First Schedule.~~ ~~**Design of hand operated flushing system**~~ ~~**Regulation 79**~~ ~~Every hand operated flushing cistern serving a urinal shall comply with the Approved Standards and shall be so designed as to give a flush of not~~		

No. CPD	Pemilik Proses	Pernyataan Pindaan/Baharu		Tambahan (T)/ ~~Pemotongan~~ (P)
		Asal	Baharu	
		~~more than 5.0 litres per stall or per 700 millimetres width of slab.~~ ~~**Automatic flushing cistern**~~ ~~**Regulation 80**~~ ~~Every flushing apparatus provided in connection with a urinal whether manual or automatic shall be of the type approved by the water supply authority.~~ ~~**Flushing valves**~~ ~~**Regulation 81 (a)**~~ ~~No flushing valves shall be installed or used in any installation unless the valves are supplied from a special feed cistern which supplies water to such valves only.~~ ~~**Regulation 81(b)**~~ ~~No flushing valves shall be installed or used in any installation unless the written approval of the water supply authority has been obtained who may grant approval subject to such conditions as he may think fit.~~ ~~**Water troughs**~~ ~~**Regulation 82**~~ ~~Every pipe supplying water to a water-trough for animals shall be fitted with a ball valve or other approved means of controlling the inflow of water so designed to prevent overflow, fixed in a separate compartment and protected by a cover which can be locked securely.~~ ~~**Disconnection of water fittings**~~ ~~**Regulation 83**~~ ~~Where any water fitting is to be permanently disconnected so much of any pipe which supplies water to that fitting and any other pipe not required to supply water to any other fitting, shall also be disconnected.~~		

No. CPD	Pemilik Proses	Pernyataan Pindaan/Baharu		Tambahan (T)/ ~~Pemotongan~~ (P)
		Asal	Baharu	
		~~**Meters to be fixed by the water supply authority**~~ ~~**Regulation 84 (1)**~~ ~~Every meter and sub-meter shall be supplied on hire, fixed and maintained by a water supply authority and shall remain its property, but the consumer shall be solely responsible for the safe custody of the meter whilst it is fixed on the service pipe supplying his premises with water and shall take any action necessary for its protection.~~ ~~**Regulation 84 (2)**~~ ~~No consumer shall permit any meter to be removed from his supply pipe unless the person is properly authorized by the water supply authority to do so.~~ ~~**Regulation 84(3)**~~ ~~Where so directed by a water supply authority, the consumer shall provide, at his own expense, a covered meter box or chamber for the protection of any meter.~~ ~~**Sitting of meters**~~ ~~**Regulation 85**~~ ~~The sitting of the meter shall be decided upon by a water supply authority who shall be at liberty to fix the meter at any position. The water supply authority reserves the right to remove and relocate any meter.~~ ~~**Meter bridge position**~~ ~~**Regulation 86**~~ ~~Meter bridges shall be constructed in the manner approved and at a position determined by a water supply authority.~~ ~~**Re-sitting of meters**~~ ~~**Regulation 87**~~ ~~Where the reading of a meter or the changing of a meter is found to be difficult at its original position due to any subsequent actions or~~		

No. CPD	Pemilik Proses	Pernyataan Pindaan/Baharu		Tambahan (T)/ ~~Pemotongan~~ (P)
		Asal	Baharu	
		~~obstructions caused by the consumer, a water supply authority may have the meter resited at the expense of the consumer.~~ ~~**Sealing of meters**~~ ~~**Regulation 88**~~ ~~A seal shall be fixed by an authorized officer to every water meter as soon as the meter is installed.~~ ~~**Tampering, damage, destruction or loss of meters**~~ ~~**Regulation 89(1)**~~ ~~When a meter has been lost, damaged or destroyed and a water supply authority is of the opinion that such loss, damage or destruction is not the result of fair wear and tear, but the result of the following events or circumstances:~~ ~~(*a*) a meter is opened up or interfered with whilst in the possession of a consumer;~~ ~~(*b*) a meter is so used that water may be wasted, misused or unduly consumed;~~ ~~(*c*) the seal of a meter is broken or any act is done tending to impair or falsify the registration of the meter; or~~ ~~(*d*) the meter is damaged otherwise than through fair wear and tear or in the course of removal,~~ ~~the amount certified by a water supply authority to be the full cost of repair or reinstatement shall be payable by the consumer on demand to the water supply authority.~~ ~~(2) The consumer shall pay to the water supply authority the full value of any damage or loss incurred as a result thereof in addition to any penalty to which he may be liable.~~ ~~**Changing of meters**~~ ~~**Regulation 90**~~ ~~A water supply authority may at its discretion change a meter at any time.~~ ~~**Measurement by main-meter or sub-meter**~~		

No. CPD	Pemilik Proses	Pernyataan Pindaan/Baharu		Tambahan (T)/ ~~Pemotongan~~ (P)
		Asal	Baharu	
		~~**Regulation 91**~~ ~~(1) Where main-meters and sub-meters are installed, the amount of water consumed shall be measured by the main-meter and the University shall pay the water supply authority for the amount of water registered by the main-meter.~~ ~~(2) Where it is not possible, for whatever reason, to measure accurately the amount of water consumed from the readings shown in the main-meter, such measurement may be obtained by aggregating the readings shown in the sub-meters related to that main-meter.~~ ~~**Testing of meters**~~ ~~**Regulation 92**~~ ~~(1) The University who desires to ascertain or confirm the accuracy of the meter which measures his water supply may, upon payment of such deposits as may be required by a water supply authority, have his meter removed and tested and the consumer or any person appointed by him may witness the test.~~ ~~(2) A meter shall be deemed to register correctly when any inaccuracy or discrepancy between its reading and water actually supplied does not exceed three per cent.~~ ~~(3) The University shall be borne, in the event of the meter being found to register correctly the cost of removal, testing, and refixing and any incidental expenses. In the event of the meter being found to over-register or under-register the cost of testing will be borne by the water supply authority, and any deposit made under paragraph (1) shall be refunded.~~ ~~(4) The result of the test shall be binding on both parties.~~ ~~**Basis of water charge in the event of failure of meter to register correctly**~~		

No. CPD	Pemilik Proses	Pernyataan Pindaan/Baharu		Tambahan (T)/ ~~Pemotongan~~ (P)
		Asal	Baharu	
		~~**Regulation 93**~~ ~~The charge to be made to the University in respect of any period or part of a period during which, in the opinion of the water supply authority, such failure has occurred or continued, shall be calculated when a water supply authority determines that a meter has, for any reasons, failed to register correctly the volume of water supplied to any premises:~~ ~~(*a*) on the basis of the average consumption for such or similar premises for the last three completed periods of billing during which in the opinion of the water supply authority, there was no incorrect registration; or~~ ~~(*b*) on the basis of an addition to or a subtraction from the amount chargeable for a particular period of billing corresponding to the percentage by which such meter was determined by the water supply authority to be registering too little or too much as the case may be; or~~ ~~(*c*) on the basis of the estimated consumption calculated from readings taken from a new meter installed at the premises; or~~ ~~(*d*) on the basis of such other equitable methods for the calculation of the estimated consumption as the water supply authority deems fit.~~ ~~**Sub-meters**~~ ~~**Regulation 94**~~ ~~(1) The University must ensure that Sub-meters shall not be installed except with the special written approval of the water supply authority which is the approval subject to such conditions as the water supply authority deems fit.~~ ~~(2) A water supply authority will not supply or install any private sub-meters and will not be responsible for the reading of such meters installed.~~ ~~(3) Where the supply to a building is sub-metered, the maintenance of the communication pipe by the water supply authority shall be up to the main meter only.~~		

No. CPD	Pemilik Proses	Pernyataan Pindaan/Baharu		Tambahan (T)/ ~~Pemotongan~~ (P)
		Asal	Baharu	
		~~**Metered water consumption**~~ ~~**Regulation 95**~~ ~~Where University premises are supplied with metered water which is paid for by an owner or landlord which is the University, whether or not the payment being recovered by him, in whole or in part, from the occupier, then for so long as he remains the owner or landlord thereof the following conditions shall apply:~~ ~~(*a*) the University shall be deemed to be the consumer until such time as he has made arrangements satisfactory to a water supply authority for any occupier to become the consumer in his place; and~~ ~~(*b*) notwithstanding any notice which he may have given either to the water supply authority or to any such occupier, the owner or landlord shall still be liable for payment of any money due in respect of such consumption.~~ ~~**Rates of water tariffs**~~ ~~**Regulation 96**~~ ~~(1) The rates of water tariffs for different categories of consumers shall be as prescribed in the Fourth Schedule.~~ ~~(2) The amount of water charged to the consumer shall include water wasted or lost through leakage or otherwise.~~ ~~**Installation of pumping system**~~ ~~**Regulation 97**~~ ~~A water supply authority may require that a pumping system or pressure boosting system be installed for part of or the whole of a building complex or multi-storey premises of the University~~ ~~**Maintenance by consumer**~~ ~~**Regulation 98**~~ ~~The pumping system shall be installed and maintained by the University who signs the contract for the supply of water to University premises. The University shall engage a contractor or firm approved by a water supply~~		

No. CPD	Pemilik Proses	Pernyataan Pindaan/Baharu		Tambahan (T)/ ~~Pemotongan~~ (P)
		Asal	Baharu	
		~~authority to service the water supply system regularly.~~ ~~**Pumping system**~~ ~~**Regulation 99**~~ ~~Every pumping system of a Univerity's building complex or multi-storey premises which is supplied with water from a water supply authority shall comply with the following requirements:~~ ~~(*a*) it shall be constructed in accordance with a specification and design approved by the water supply authority (all specification and design shall be prepared and submitted for approval, prior to construction, by consultants registered with the State Water Authority for the type of work);~~ ~~(*b*) (i) it shall have a suction cistern or cisterns from which water shall be pumped by pumpsets and related control equipment to high level storage cistern or cisterns at the appropriate levels of the building (a duplicate set of pumpset or pumpsets shall be provided as standby to the operating pumpset or pumpsets);~~ ~~(ii) the pumpsets shall be designed for automatic operations based on water levels in the low level suction cisterns and high level storage cisterns;~~ ~~(*c*) the suction cistern or cisterns shall be of suitable capacity and installed at a suitable level to receive water from the public main (a water supply authority may at its discretion require the inflow into the suction cistern or cisterns to be regulated);~~ ~~(*d*) the total capacity of the roof storage and suction cisterns shall not be less than the one day's demand of the building or complex (any storage requirements for fire-fighting services shall be in accordance to the requirements of Jabatan Bomba); and~~ ~~(*e*) an approved active pressure pumping system may be installed in lieu of a pump and high level storage system with the approval of the water supply authority.~~		

No. CPD	Pemilik Proses	Pernyataan Pindaan/Baharu		Tambahan (T)/ ~~Pemotongan~~ (P)
		Asal	Baharu	
		~~**Metering of supply**~~ ~~**Regulation 100**~~ ~~The supply to all multi-storey premises and building complexes may be bulk-metered at the discretion of a water supply authority. Water supplies to flats or dwelling units in multi- storey buildings may be individually metered but subject to approval from a water supply authority.~~ ~~**Drinking water conveyed separately**~~ ~~**Regulation 101**~~ ~~Water for drinking and cooking purposes shall be conveyed from separate roof storage cisterns by individual distribution pipes. A water supply authority may at its discretion allow other systems to be used.~~ ~~**Installation of supply main, *etc*.**~~ ~~**Regulation 106**~~ ~~The University must ensure that the developer shall bear the entire cost of the installation of the supply main to residential or development areas from the point of connection determined by a water supply authority, internal reticulation mains, booster pumping systems, reservoirs and other water supply related appurtenances in accordance with the requirements of a water supply authority.~~ ~~**Supply system to have approval of water supply authority**~~ ~~**Regulation 108**~~ ~~(1) Where the water supply system of the residential or development areas in the University is not constructed by a water supply authority, the system shall be constructed to the specification and design approved by the water supply authority.~~ ~~(2) The design and supervision of the construction of the system shall be carried out by an engineering consultant registered with the State Water Authority for the type of works.~~		

No. CPD	Pemilik Proses	Pernyataan Pindaan/Baharu		Tambahan (T)/ ~~Pemotongan~~ (P)
		Asal	Baharu	
		~~**Taking over of supply system**~~ ~~**Regulation 109**~~ ~~The University must ensure upon completion, the supervising consultant shall certify that the works have been completed in accordance with all requirements of a water supply authority. The developer shall then apply to the water supply authority to take over the completed water supply distribution system. Provided the water supply authority is satisfied that the system or installations have been completed in full compliance with all requirements of the Ordinance and these Regulations and that the system is performing to the satisfaction of the water supply authority and the necessary spares for the pumping and other equipment are supplied to the water supply authority, the water supply authority may take over part or all of the system or installations, without compensation for use as a public water supply system. Whereupon the system or installations including land on which the installations are built shall be vested in that water supply authority.~~ ~~**Maintenance by developer before taking over**~~ ~~**Regulation 110**~~ ~~Until the effective date of the taking over by a water supply authority, the University must ensure that the developer shall be responsible for operation and maintenance of the water supply system. The developer shall engage a contractor or firm approved by the water supply authority to service regularly and maintain the system to the satisfaction of the water supply authority.~~ ~~**Pumping system**~~ ~~**Regulation 111**~~ ~~Where a pumping system is required to supply a residential estate, regulation 99 shall apply: Provided that a water supply authority may at its discretion allow other pumping systems to be used.~~		

No. CPD	Pemilik Proses	Pernyataan Pindaan/Baharu		Tambahan (T)/ ~~Pemotongan~~ (P)
		Asal	Baharu	
		~~**Standpipes**~~ ~~**Regulation 112**~~ ~~The University must ensure that every standpipe which is accessible to the public shall, unless exempted by a water supply authority in writing, be provided with a non-concussive and self-closing draw-off tap of the approved type. Water supplied through a standpipe shall be metered and payment for water so supplied shall be charged to such person or persons as may be determined by a water supply authority.~~ ~~**Use of standpipes**~~ ~~**Regulation 113**~~ ~~(1) The University must ensure no person use a public standpipe for washing animals and vehicles or for any trade purpose.~~ ~~(2) The University must ensure every person who draws water from a public standpipe shall thereafter completely close the tap after use.~~ ~~**Attachment to standpipe**~~ ~~**Regulation 114**~~ ~~The University must ensure no hose or any form of connections shall be attached to the tap of any standpipe.~~ ~~**Tampering with standpipe**~~ ~~**Regulation 115**~~ ~~The University must ensure no person shall tamper with, alter, damage or remove any fittings of any standpipe.~~ ~~**Swimming pools**~~ ~~**Regulation 116**~~ ~~Every swimming pool in the University exceeding 25 000 litres in size, which is supplied with water from the mains shall comply with the following requirement:~~		

No. CPD	Pemilik Proses	Pernyataan Pindaan/Baharu		Tambahan (T)/ ~~Pemotongan~~ (P)
		Asal	Baharu	
		~~(*a*) it shall be constructed, in accordance with a specification and design approved by a water supply authority, (construction shall only commence after approval from a water supply authority);~~ ~~(*b*) the inlet pipe of every swimming pool shall discharge into a separate and distinct chamber from the pool so that the inlet shall discharge at least 250 millimetres above the water line of the chamber (the chamber shall be provided with a lockable cover); and~~ ~~(*c*) the control valve on the service pipe or distribution pipe which serves the pool shall also be in the inlet chamber and shall only be accessible for operation when the chamber is open.~~ ~~**Operator's responsibility**~~ ~~**Regulation 117**~~ ~~The University must ensure that the operator of every swimming pool, accessible to the public, shall ensure that the quality of the water of the swimming pool meets the requirements of the health authority at all times.~~ ~~**Depletion of pool**~~ ~~**Regulation 118**~~ ~~Should any pool become depleted by an amount exceeding 25 000 litres, due to the pool being cleansed or any other reasons, the University must ensure notice in writing shall be given to a water supply authority at least three days prior to the operator wishing to recharge the pool. It shall be at the discretion of the water supply authority to refuse consent for recharging of any swimming pool without assigning any reason.~~ ~~**Avoidance of waste**~~ ~~**Regulation 119**~~ ~~The University must ensure no swimming pool and its associated equipment and fittings shall be constructed and installed or be in such a state as to cause waste or undue consumption of the water supplied from~~		

No. CPD	Pemilik Proses	Pernyataan Pindaan/Baharu		Tambahan (T)/ ~~Pemotongan~~ (P)
		Asal	Baharu	
		~~the mains.~~ ~~**Separate metering**~~ ~~**Regulation 120**~~ ~~The University must ensure that the supply to every swimming pool shall be separately metered and charged in accordance with the charges prescribed by a water supply authority.~~ ~~**Fountains and ornamental pools**~~ ~~**Regulation 121**~~ ~~Every fountain or ornamental pool exceeding 15 000 litres in capacity, which is supplied with water from the mains shall be constructed in accordance with a specification and design approved by a water supply authority.~~ ~~**Separate metering**~~ ~~**Regulation122**~~ ~~A water supply authority may at its discretion require the fountain or ornamental pool to be separately metered and charged in accordance with the charges prescribed by a water supply authority.~~ ~~**Licensing of pipe fitters**~~ ~~**Regulation 123**~~ ~~(1) Pipe fitters must be a person holding a valid licence as a pipe fitter issued by the State Water Authority under this Part.~~ ~~**Licensing of mainslayers**~~ ~~**Regulation 125**~~ ~~(1) Mainslayers must be a person holding a valid licence as a mainslayers issued by the State Water Authority under this Part.~~		

No. CPD	Pemilik Proses	Pernyataan Pindaan/Baharu		Tambahan (T)/ ~~Pemotongan~~ (P)
		Asal	Baharu	
		~~**Withholding and withdrawing supply**~~ ~~**Regulation 129**~~ ~~A water supply authority may withhold or withdraw the supply of water through any mains, pipes or fittings or any other works laid, fitted or executed by any person not registered with the State Water Authority, as a licensed pipe fitter or mainslayer.~~ ~~**Fees for inspection and testing of pipes**~~ ~~**Regulation 134**~~ ~~The fees for the inspection and testing of service pipe or distributing pipe or mains or fittings are set out in the Fourth Schedule.~~ ~~**Application for water supply**~~ ~~**Regulation 136**~~ ~~(1) (*a*) The University shall submit an application to the water supply authority concerned if the University desires water to be supplied to him or any premises, by a water supply authority.~~ ~~(*b*) Every application shall contain an undertaking by the University that it agrees to abide by the provisions of these Regulations for the supply of water to him or his premises.~~ ~~(2) (*a*) The University shall produce a certified true copy of issued document of title for land on which the premises to be supplied is situated, or other document of proof of its ownership of premises.~~ ~~(*b*) If the University is occupying native customary rights land or land held without title, it shall produce a letter from a District Officer or a Superintendent of Lands and Surveys or any public officer authorized by either of them, to prove his legitimate occupation of the land to which water is to be supplied.~~ ~~(3) Except with the approval of a water supply authority and subject to the terms of an agreement required under section 29(3)(*a*) of the Ordinance between a water supply authority and a consumer, no water shall be supplied other than through a meter.~~		

No. CPD	Pemilik Proses	Pernyataan Pindaan/Baharu		Tambahan (T)/ ~~Pemotongan~~ (P)
		Asal	Baharu	
		~~**Communication pipes laid at consumer's expense**~~ ~~**Regulation 137**~~ ~~(1) Communication pipes shall be provided and laid by a water supply authority at the expense of the consumer.~~ ~~(2) Supply pipes and distributing pipes and all fittings required shall be laid and maintained by a licensed pipe fitter or, in special circumstances, by a water supply authority, at the expense of the consumer.~~ ~~**Supply shall be by means of one communication pipe**~~ ~~**Regulation 138**~~ ~~(1) Except with the written consent of a water supply authority, no dwelling house or other premises charged or chargeable separately with water rate shall be supplied with water by a water supply authority by means of more than one communication pipe connected to the mains of the water supply authority.~~ ~~(2) In this regulation "dwelling house" includes any part of a building which is occupied as a separate dwelling.~~ ~~**Installation of communication pipe and meter**~~ ~~**Regulation 139**~~ ~~(1) On completion of the laying of pipes and fittings for a new water system from the point where the communication pipe leaves the mains and after such pipe and fittings and the laying and installation thereof have been inspected, tested and approved by a water supply authority, the water supply authority will at the expense of the consumer or intending consumer lay and install a communication pipe from the mains and fix a stop tap for the control of the supply of water.~~ ~~(2) After a water supply authority is satisfied that a consumer has satisfied all the requirements for supply stipulated in section 29 of the Ordinance, an authorized officer will install a meter and commence the supply to that consumer.~~		

No. CPD	Pemilik Proses	Pernyataan Pindaan/Baharu		Tambahan (T)/ ~~Pemotongan~~ (P)
		Asal	Baharu	
		~~**Extension of supply to another premises**~~ ~~**Regulation 142**~~ ~~Distributing pipe or service pipe shall not be extended so that water can be drawn therefrom to any other premises.~~ ~~**Defective water fittings and private supply installation**~~ ~~**Regulation 143**~~ ~~Where, in the opinion of a water supply authority, any fitting installed in connection with a private installation and maintainable at the University's expense, is so defective or obstructed as to cause or be likely to cause, waste, undue consumption, blockage or contamination of water supplied from the mains:~~ ~~(*a*) where such a fitting is a communication pipe or part thereof, an authorized officer may disconnect the supply without notice for the purpose of carrying out repairs, and charge the costs of such repairs to the University; or~~ ~~(*b*) where the fitting does not form part of a communication pipe, an authorized officer shall serve a written notice on the University, detailing the repairs required and specifying the period within which the repairs shall be carried out.~~ ~~**Tapping equipment**~~ ~~**Regulation 144**~~ ~~Tapping of water from any pipe shall be carried out by using the correct type of tapping equipment approved by the State Water Authority for the type of pipe and no other method of tapping of the pipe, other than by the proper use of the correct tapping machine, is allowed.~~ ~~**Power to disconnect**~~ ~~**Regulation 145**~~ ~~Should the University fail to comply with a notice served in accordance with regulation 143(*b*) above, a water supply authority may disconnect~~		

No. CPD	Pemilik Proses	Pernyataan Pindaan/Baharu		Tambahan (T)/ ~~Pemotongan~~ (P)
		Asal	Baharu	
		~~the supply and recover the cost of disconnection from the University.~~ ~~**Reconnection of supply**~~ ~~**Regulation 146**~~ ~~Where supply has been disconnected for non-payment of monies due to a water supply authority or in accordance with regulation 145 for non-compliance with a notice served, the supply may be re-connected upon payment of the monies due and upon compliance with all requirements of the water supply authority. A water supply authority shall not be liable for any losses or expenses arising from the disconnection carried out pursuant to regulation 145.~~ ~~**Payment for connection by a new consumer**~~ ~~**Regulation 147**~~ ~~The University entering into a new agreement for a supply of water to any premises shall pay the fee for such supply, irrespective of whether there is already an existing connection or otherwise.~~ ~~(2) On termination of a water supply agreement, the amount of the final water bill including all arrears up to the date of the disconnection of supply may be deducted from the University's deposit and the balance thereof, if any, shall be refunded to him within 60 days from the date of termination of the agreement.~~ ~~**Temporary supply for building or construction**~~ ~~**Regulation 149**~~ ~~In the event of the University requiring supply of water for building or construction works, such supply may, at the discretion of a water supply authority, be provided but only for a period not exceeding six months or such other period as a water supply authority may permit, and shall be charged at the rates laid down by the water supply authority. This supply shall be disconnected on completion of the building or construction works or at the end of the period allowed by that water supply authority, whichever is the earlier.~~		

No. CPD	Pemilik Proses	Pernyataan Pindaan/Baharu		Tambahan (T)/ ~~Pemotongan~~ (P)
		Asal	Baharu	
		~~**Water supply for temporary purpose**~~ ~~**Regulation 150**~~ ~~(1) An applicant for water required for temporary purpose shall state the intended period (not exceeding six months) during which such supply is required and shall pay a deposit of an amount to be determined by a water supply authority, prior to the commencement of such temporary supply.~~ ~~(2) If the supply of water is required beyond the six months period, the University shall notify the water supply authority, and unless the water supply authority agrees to the extension of the period, the supply of water shall be terminated on the last date of the six months period.~~ ~~(3) At the end of the period for the temporary water supply, the deposit paid by the University under paragraph (1) of this regulation shall be refunded to him provided that there are no outstanding water charges owing by the University to a water supply authority.~~ ~~**Use of hoses for building operations**~~ ~~**Regulation 152**~~ ~~The University shall not draw water from the mains by a hose unless such water shall have first passed through a storage cistern or feed cistern or an approved anti-back siphonage device. This regulation shall not apply if the water is drawn from a hydrant for fire fighting purposes.~~ ~~**Application to abstract ground water, *etc*.**~~ ~~**Regulation 153**~~ ~~An application for a licence:~~ ~~(*a*) to abstract ground water;~~ ~~(*b*) to abstract, draw or take raw water from any river, stream or water courses;~~ ~~(*c*) for the impounding of water in any river, stream or water courses,~~ ~~shall be made in a form prescribed by the State Water Authority and if the abstraction, drawing, taking or impounding of water is to take place~~		

No. CPD	Pemilik Proses	Pernyataan Pindaan/Baharu		Tambahan (T)/ ~~Pemotongan~~ (P)
		Asal	Baharu	
		~~within the area of supply of a water supply authority, the application should be submitted to the State Water Authority through that water supply authority.~~ ~~**Licence to abstract ground water. Drilling works prohibited without licence**~~ ~~**Regulation 154**~~ ~~(2) The University shall not undertake any works for the drilling or construction of any well, borehole or similar structure for abstraction of groundwater unless a licence has been issued pursuant to this regulation.~~ ~~**Offences**~~ ~~**Regulation 157**~~ ~~Failure of the University to comply with any of the provisions of these Regulations shall be guilty of an offence: Penalty, a maximum fine of five thousand ringgit or imprisonment for up to two years or both.~~ ~~**FIRST SCHEDULE**~~ ~~**APPROVED STANDARDS of Pipes, Fittings etc. are as listed in the First Schedule**~~ ~~*(Regulations 2, 14, 15, 16, 19, 20, 21, 23, 43(5), 45(2), 47, 49, 57, 58, 71, 78)*~~ ~~THE STANDARDS OF PIPES, FITTINGS, *ETC.*, REFER TO CURRENT STANDARDS ISSUED BY EITHER SIRIM OR IN THE ABSENCE OF SIRIM STANDARDS, THE RELEVANT STANDARDS ISSUED BY BRITISH STANDARDS INSTITUTION OR INTERNATIONAL ORGANISATION FOR STANDARDISATION (ISO)~~ ~~**SECOND SCHEDULE**~~ ~~**APPROVED STANDARDS FOR THE TYPES AND CLASSES OF PIPES APPROVED FOR USE BY THE STATE WATER AUTHORITY** are as listed in the Second Schedule.~~ ~~*(Regulations 2, 11, 12,15, 26)*~~		

No. CPD	Pemilik Proses	Pernyataan Pindaan/Baharu		Tambahan (T)/ ~~Pemotongan~~ (P)
		Asal	Baharu	
		~~**THIRD SCHEDULE**~~ ~~**PIPE FITTER LICENCE** is as as in the prescribed Form A in the Third Schedule.~~ ~~*(Regulation 123(3))*~~ ~~**MAINSLAYER LICENCE** is as as in the prescribed Form B in the Third Schedule.~~ ~~*(Regulation 125(3))*~~ ~~**FOURTH SCHEDULE**~~ ~~*(Regulations 92, 96, 123(4), 125(4), 134, 156, 161(2))*~~ ~~**The prescribed fees are as listed in Fourth Schedule**~~ ~~**FIFTH SCHEDULE**~~ ~~*(Regulations 159(3))*~~ ~~**OFFER TO COMPOUND OFFENCE(S) and the receipt** as in **the prescribed Form No.1 and No.2 in the Fifth Schedule.**~~		

BAHAGIAN B: Kelulusan CADANGAN PINDAAN DOKUMEN ISO

(Diisi oleh PKD / TPKD mengikut skop dokumen ISO)

Peneraju Proses:	PEJABAT PENASIHAT UNDANG-UNDANG (PPUU)		
Kelulusan Mesyuarat:	Mesyuarat Pengurusan Khas Pejabat Penasihat Undang-Undang	**Kali ke-**	01/2018
Tarikh Mesyuarat:	7 Januari 2018		
Cadangan Tarikh Kuatkuasa *:	16/03/2018		

Nota *:

- Tarikh Kuatkuasa merujuk kepada tarikh yang ditetapkan dan sila berhubung dengan PKD sekiranya perlukan tarikh kuarkuasa lain
- Masukkan Huraian Pindaan Dokumen yang dilampirkan oleh pencadang bersama Borang Cadangan Pindaan/Tambahan Dokumen.